ThinkPad

Hardware Maintenance Manual

ThinkPad X200, X200s, X200si, X201, X201i, and X201s

Downloaded from LpManual.com Manuals

Note

Before using this information and the product it supports, be sure to read the general information under Appendix A “Notices” on page 269.

Eleventh Edition (September 2012)

© Copyright Lenovo 2010, 2012.

LIMITED AND RESTRICTED RIGHTS NOTICE: If data or software is delivered delivered pursuant a General Services Administration “GSA” contract, use, reproduction, or disclosure is subject to restrictions set forth in Contract No. GS-35F-05925.

Downloaded from LpManual.com Manuals

Contents

About this manual iii

Chapter 1. Safety information 1

General safety 1
Electrical safety 2
Safety inspection guide 3
Handling devices that are sensitive to electrostatic discharge 3
Grounding requirements 4
Safety notices (multilingual translations) 4
Laser compliance statement (multilingual translations) 22

Chapter 2. Important service information 29

Strategy for replacing FRUs 29
- Strategy for replacing a hard disk drive . . . 30
- Important notice for replacing a system board 30
- How to use error message 30

Strategy for replacing FRUs for CTO, CMV, and GAV 30
- Product definition 30
- FRU identification for CTO, CMV, and GAV products 31

Chapter 3. General checkout 33

What to do first 33
Checkout guide 34
- System supporting the Lenovo ThinkVantage Toolbox program and the PC-Doctor for DOS diagnostics program 34
- System supporting the Lenovo diagnostics programs 39

Power system checkout 41
- Checking the ac adapter 41
- Checking operational charging 42
- Checking the battery pack 42
- Checking the backup battery 42

Chapter 4. Related service information 45

Restoring the factory contents by using Product Recovery discs 45
Restoring the factory contents by using Recovery Disc Set 45
Passwords 47
- Power-on password 47
- Hard-disk password 47
- Supervisor password 47
- How to remove the power-on password . . . 47
- How to remove the hard-disk password . . . 48

Power management 48
- Screen blank mode 48
- Sleep (Standby) mode 49
- Hibernation mode 49

Symptom-to-FRU index 50
- Numeric error codes 51
- Error messages 55
- Beep symptoms 56
- No-beep symptoms 56
- LCD-related symptoms 56
- Intermittent problems 57
- Undetermined problems 57

Chapter 5. Status indicators 59

Chapter 6. Fn key combinations . . . 63

Chapter 7. FRU replacement notices 65

Screw notices 65
Retaining serial numbers 66
- Restoring the serial number of the system unit 66
- Retaining the UUID 67
- Reading or writing the ECA information . . . 67

Chapter 8. Removing and replacing a FRU 69

Before servicing ThinkPad X200, X200s, X200si, X201, X201i, and X201s 70
1010 Battery pack 71
1020 Hard disk drive (HDD) cover, HDD, and HDD rubber rails or solid state drive (SSD) and storage converter 71
1030 DIMM 74
1040 Keyboard 77
1050 Palm rest or palm rest with fingerprint reader 80
1060 Backup battery 82
1070 PCI Express Mini Card for wireless LAN/WiMAX 83
1080 PCI Express Mini Card for wireless WAN . . 86
1090 Intel Turbo Memory Minicard or Wireless USB PCI Express Half-Mini Card 87
1100 Keyboard bezel 88

© Copyright Lenovo 2010, 2012

Downloaded from LpManual.com Manuals

1110 Monaural speaker assembly (for X200, X200s, X201s, and X201si) 89
1120 I/O card assembly 90
1130 LCD assembly 92
1140 Base cover assembly and stereo speaker assembly for X201 and X201i 95
1150 Systemboard, DC-in connector, fan, and ExpressCard slot assembly 100
2010 LCD front bezel 111
2020 Inverter card or LED board 113
2030 Bluetooth daughter card (BDC-2.1) 115
2040 Integrated camera 116
2050 LCD panel, LCD brackets, and LCD cable . . 117
2060 Hinges and hinge brackets 122
2070 LCD rear cover and wireless antenna cables 124

Chapter 9. Locations 131
Front view 131
Rear view 132
Bottom view 133
Rear view (ThinkPad X200 UltraBase) 133
Bottom view (ThinkPad X200 UltraBase) 134

Chapter 10. Parts list 135
Overall 136
LCD FRUs 220
12.1-in. WXGA TFT 221
12.1-in. WXGA+ TFT 242
Keyboard 246
Miscellaneous parts 247
AC adapters 247
Power cords 248
Recovery discs 249
Windows XP Professional (32 bit) DVDs . . . 249
Windows Vista Home Basic (32-bit) DVDs . . 251
Windows Vista Home Premium (32-bit) DVDs 252
Windows Vista Business (32-bit) DVDs . . . 253
Windows Vista Business (64-bit) DVDs . . . 255
Windows Vista Ultimate (32-bit) DVDs 256
Windows 7 Home Basic (32-bit) DVDs . . . 258
Windows 7 Home Premium (32-bit) DVDs . . 259
Windows 7 Home Premium (64-bit) DVDs . . 260
Windows 7 Professional (32-bit) DVDs . . . 262
Windows 7 Professional (64-bit) DVDs . . . 265
Windows 7 Starter (32-bit) DVDs 266
Common service tools 267

Appendix A. Notices 269
Trademarks 270

Downloaded from LpManual.com Manuals

About this manual

This manual contains service and reference information for the following ThinkPad ® products.

ThinkPad X200	MT 7454, 7455, 7457, 7458, 7459, 2023, and 2024
ThinkPad X200s and X200si	MT 7462, 7465, 7466, 7469, 7470, 2046, and 2047
ThinkPad X201 and X201i	MT 3249, 3323, 3357, 3626, 3680, 3712, and 4492
ThinkPad X201s	MT 5129, 5143, 5385, 5397, 5413, 5442, and 5446

Use this manual along with the advanced diagnostic tests to troubleshoot problems.

Important: This manual is intended only for trained service technicians who are familiar with ThinkPad products. Use this manual along with the advanced diagnostic tests to troubleshoot problems effectively.

Before servicing a ThinkPad product, be sure to read all the information under Chapter 1 “Safety information” on page 1 and Chapter 2 “Important service information” on page 29.

© Copyright Lenovo 2010, 2012

Downloaded from LpManual.com Manuals

Downloaded from LpManual.com Manuals

Chapter 1. Safety information

This chapter presents following safety information that you need to be familiar with before you service a ThinkPad Notebook.

- “General safety” on page 1
- “Electrical safety” on page 2
- “Safety inspection guide” on page 3
- “Handling devices that are sensitive to electrostatic discharge” on page 3
- “Grounding requirements” on page 4
- “Safety notices (multilingual translations)” on page 4
- “Laser compliance statement (multilingual translations)” on page 22

General safety

Follow these rules to ensure general safety:

- Observe good housekeeping in the area of the machines during and after maintenance.
- When lifting any heavy object:
  1. Make sure that you can stand safely without slipping.
  2. Distribute the weight of the object equally between your feet.
  3. Use a slow lifting force. Never move suddenly or twist when you attempt to lift.
  4. Lift by standing or by pushing up with your leg muscles; this action removes the strain from the muscles in your back. *Do not attempt to lift any object that weighs more than 16 kg (35 lb) or that you think is too heavy for you.*
- Do not perform any action that causes hazards to the customer, or that makes the equipment unsafe.
- Before you start the machine, make sure that other service technicians and the customer's personnel are not in a hazardous position.
- Place removed covers and other parts in a safe place, away from all personnel, while you are servicing the machine.
- Keep your toolcase away from walk areas so that other people will not trip over it.
- Do not wear loose clothing that can be trapped in the moving parts of a machine. Make sure that your sleeves are fastened or rolled up above your elbows. If your hair is long, fasten it.
- Insert the ends of your necktie or scarf inside clothing or fasten it with a nonconductive clip, about 8 centimeters (3 inches) from the end.
- Do not wear jewelry, chains, metal-frame eyeglasses, or metal fasteners for your clothing.

  Attention: Metal objects are good electrical conductors.
- Wear safety glasses when you are hammering, drilling, soldering, cutting wire, attaching springs, using solvents, or working in any other conditions that might be hazardous to your eyes.
- After service, reinstall all safety shields, guards, labels, and ground wires. Replace any safety device that is worn or defective.
- Reinstall all covers correctly before returning the machine to the customer.
- Fan louvers on the machine help to prevent overheating of internal components. Do not obstruct fan louvers or cover them with labels or stickers.

© Copyright Lenovo 2010, 2012

Downloaded from LpManual.com Manuals

Electrical safety

Observe the following rules when working on electrical equipment.

Important: Use only approved tools and test equipment. Some hand tools have handles covered with a soft material that does not insulate you when working with live electrical currents.

Many customers have, near their equipment, rubber floor mats that contain small conductive fibers to decrease electrostatic discharges. Do not use this type of mat to protect yourself from electrical shock.

- Find the room emergency power-off (EPO) switch, disconnecting switch, or electrical outlet. If an electrical accident occurs, you can then operate the switch or unplug the power cord quickly.
- Do not work alone under hazardous conditions or near equipment that has hazardous voltages.
- Disconnect all power before:
  - Performing a mechanical inspection
  - Working near power supplies
  - Removing or installing main units
- Before you start to work on the machine, unplug the power cord. If you cannot unplug it, ask the customer to power-off the wall box that supplies power to the machine, and to lock the wall box in the off position.
- If you need to work on a machine that has *exposed* electrical circuits, observe the following precautions:
  - Ensure that another person, familiar with the power-off controls, is near you.

    Attention: Another person must be there to switch off the power, if necessary.
  - Use only one hand when working with powered-on electrical equipment; keep the other hand in your pocket or behind your back.

    Attention: An electrical shock can occur only when there is a complete circuit. By observing the above rule, you may prevent a current from passing through your body.
  - When using testers, set the controls correctly and use the approved probe leads and accessories for that tester.
  - Stand on suitable rubber mats (obtained locally, if necessary) to insulate you from grounds such as metal floor strips and machine frames.

  Observe the special safety precautions when you work with very high voltages; Instructions for these precautions are in the safety sections of maintenance information. Use extreme care when measuring high voltages.
- Regularly inspect and maintain your electrical hand tools for safe operational condition.
- Do not use worn or broken tools and testers.
- *Never assume* that power has been disconnected from a circuit. First, *check* that it has been powered off.
- Always look carefully for possible hazards in your work area. Examples of these hazards are moist floors, nongrounded power extension cables, power surges, and missing safety grounds.
- Do not touch live electrical circuits with the reflective surface of a plastic dental mirror. The surface is conductive; such touching can cause personal injury and machine damage.
- Do not service the following parts *with the power on* when they are removed from their normal operating places in a machine:
  - Power supply units
  - Pumps
  - Blowers and fans
  - Motor generators
  - Similar units to listed above

  This practice ensures correct grounding of the units.
- If an electrical accident occurs:

Downloaded from LpManual.com Manuals

– Use caution; do not become a victim yourself.
– Switch off power.
– Send another person to get medical aid.

Safety inspection guide

The purpose of this inspection guide is to assist you in identifying potentially unsafe conditions. As each machine was designed and built, required safety items were installed to protect users and service technicians from injury. This guide addresses only those items. You should use good judgment to identify potential safety hazards due to attachment of non-ThinkPad features or options not covered by this inspection guide.

If any unsafe conditions are present, you must determine how serious the apparent hazard could be and whether you can continue without first correcting the problem.

Consider these conditions and the safety hazards they present:

- Electrical hazards, especially primary power (primary voltage on the frame can cause serious or fatal electrical shock)
- Explosive hazards, such as a damaged CRT face or a bulging capacitor
- Mechanical hazards, such as loose or missing hardware

To determine whether there are any potentially unsafe conditions, use the following checklist at the beginning of every service task. Begin the checks with the power off, and the power cord disconnected.

Checklist:

1. Check exterior covers for damage (loose, broken, or sharp edges).
2. Power off the computer. Disconnect the power cord.
3. Check the power cord for:
   a. A third-wire ground connector in good condition. Use a meter to measure third-wire ground continuity for 0.1 ohm or less between the external ground pin and the frame ground.
   b. The power cord should be the type specified in the parts list.
   c. Insulation must not be frayed or worn.
4. Check for cracked or bulging batteries.
5. Remove the cover.
6. Check for any obvious non-ThinkPad alterations. Use good judgment as to the safety of any non-ThinkPad alterations.
7. Check inside the unit for any obvious unsafe conditions, such as metal filings, contamination, water or other liquids, or signs of fire or smoke damage.
8. Check for worn, frayed, or pinched cables.
9. Check that the power-supply cover fasteners (screws or rivets) have not been removed or tampered with.

Handling devices that are sensitive to electrostatic discharge

Any computer part containing transistors or integrated circuits (ICs) should be considered sensitive to electrostatic discharge (ESD.) ESD damage can occur when there is a difference in charge between objects. Protect against ESD damage by equalizing the charge so that the machine, the part, the work mat, and the person handling the part are all at the same charge.

Notes:

1. Use product-specific ESD procedures when they exceed the requirements noted here.

Downloaded from LpManual.com Manuals

2. Make sure that the ESD protective devices you use have been certified (ISO 9000) as fully effective.

When handling ESD-sensitive parts:

- Keep the parts in protective packages until they are inserted into the product.
- Avoid contact with other people.
- Wear a grounded wrist strap against your skin to eliminate static on your body.
- Prevent the part from touching your clothing. Most clothing is insulative and retains a charge even when you are wearing a wrist strap.
- Use a grounded work mat to provide a static-free work surface. The mat is especially useful when handling ESD-sensitive devices.
- Select a grounding system, such as those listed below, to provide protection that meets the specific service requirement.

  Note: The use of a grounding system to guard against ESD damage is desirable but not necessary.

  – Attach the ESD ground clip to any frame ground, ground braid, or green-wire ground.
  – When working on a double-insulated or battery-operated system, use an ESD common ground or reference point. You can use coax or connector-outside shells on these systems.
  – Use the round ground prong of the ac plug on ac-operated computers.

Grounding requirements

Electrical grounding of the computer is required for operator safety and correct system function. Proper grounding of the electrical outlet can be verified by a certified electrician.

Safety notices (multilingual translations)

The safety notices in this section are provided in the following languages:

- English
- Arabic
- Brazilian Portuguese
- French
- German
- Hebrew
- Japanese
- Korean
- Spanish
- Traditional Chinese

Downloaded from LpManual.com Manuals

DANGER

Before the computer is powered on after FRU replacement, make sure that all screws, springs, and other small parts are in place and are not left loose inside the computer. Verify this by shaking the computer and listening for rattling sounds. Metallic parts or metal flakes can cause electrical short circuits.

DANGER

Some standby batteries contain a small amount of nickel and cadmium. Do not disassemble a standby battery, recharge it, throw it into fire or water, or short-circuit it. Dispose of the battery as required by local ordinances or regulations. Use only the battery in the appropriate parts listing. Use of an incorrect battery can result in ignition or explosion of the battery.

DANGER

The battery pack contains small amounts of nickel. Do not disassemble it, throw it into fire or water, or short-circuit it. Dispose of the battery pack as required by local ordinances or regulations. Use only the battery in the appropriate parts listing when replacing the battery pack. Use of an incorrect battery can result in ignition or explosion of the battery.

DANGER

The lithium battery can cause a fire, an explosion, or a severe burn. Do not recharge it, remove its polarized connector, disassemble it, heat it above 100°C (212°F), incinerate it, or expose its cell contents to water. Dispose of the battery as required by local ordinances or regulations. Use only the battery in the appropriate parts listing. Use of an incorrect battery can result in ignition or explosion of the battery.

DANGER

If the LCD breaks and the fluid from inside the LCD gets into your eyes or on your hands, immediately wash the affected areas with water for at least 15 minutes. Seek medical care if any symptoms from the fluid are present after washing.

Downloaded from LpManual.com Manuals

DANGER

Though the main batteries have low voltage, a short-circuited or grounded battery can produce enough current to burn personnel or combustible materials.

DANGER

Unless hot swap is allowed for the FRU being replaced, do as follows before removing it: power off the computer, unplug all power cords from electrical outlets, remove the battery pack, and disconnect any interconnecting cables.

Downloaded from LpManual.com Manuals

خطر

قبل اعادة تشغيل الحاسب بعد الانتهاء من استبدال FRU، تأكد من أنه قد تم اعادة كل من المسامير و السوست وكل الأجزاء الصغيرة الأخرى في أماكنهم ولم يتم فقدهم داخل الحاسب.
ويمكن التحقق من ذلك عن طريق هز الحاسب والاستماع لأي صوت صاخب يصدر منه.
قد تؤدي الأجزاء أو الرقائق المعدنية الى حدوث دائرة قصر.

خطر

تحتوي بعض البطاريات الاحتياطية على كمية صغيرة من مادتي النيكل والكادميوم. لا تقم بفك أو اعادة شحن البطارية الاحتياطية ولا تقم أيضا بالقاءها في النار أو الماء ولا تتسبب في احداث دائرة قصر بها. قم بالتخلص من البطارية كما هو موضح في القوانين المحلية.
استخدم نوع البطارية المحدد والذي يوصى باستخدامه. حيث أنه قد يؤدي استخدام نوع بطارية غير صحيح الى اشتعالها أو انفجارها.

خطر

تحتوي حزمة البطارية على كمية صغيرة من مادة النيكل. لا تقم بفكها أو القاءها في النار أو الماء ولا تتسبب في احداث دائرة قصر بها. تخلص من حزمة البطارية وفقا لما هو موضح في القوانين المحلية. قم، عند استبدال حزمة البطارية، باستخدام الأنواع المحددة فقط والتي يوصى باستخدامها. حيث أنه قد يؤدي استخدام نوع بطارية غير صحيح الى اشتعالها أو انفجارها.

خطر

قد تتسبب بطارية الليثيوم في حدوث حريق أو انفجار أو حدوث حروق شديدة. لا تقم باعادة شحن البطارية أو ازالة موصل الاستقطاب الخاص بها ولا تحاول أيضا فكها أو تسخينها لأكثر من ١٠٠ درجة مئوية (٢١٢ فهرنهايت) أو حرقها أو تعريض محتويات الخانة الخاصة بها للماء. قم بالتخلص من البطارية وفقا لما هو موضح في القوانين المحلية. استخدم نوع البطارية المحدد والذي يوصى باستخدامه. حيث أنه قد يؤدي استخدام نوع بطارية غير صحيح الى اشتعالها أو انفجارها.

خطر

اذا ما انكسرت شاشة LCD ولامس السائل الداخلي عينيك أو يديك، قم في الحال بغسلهما بالماء لمدة لا تقل عن ١٥ دقيقة. اذا ما وجدت أي أعراض بعد الغسل اطلب عندئذ المساعدة الطبية.

Downloaded from LpManual.com Manuals

على الرغم من أن البطاريات الرئيسية يكون لها جهد منخفض، الا أنه قد تقوم البطاريات التي حدث قصور بها أو التي تم توصيلها أرضيا باصدار تيار يكفي لحدوث حروق للأفراد أو تعرض المواد القابلة للاشتعال للحريق.

ما لم يتم السماح بالتبديل الفوري لأي FRU الجاري استبداله بدون ضرورة اغلاق النظام، قم بتنفيذ ما يلي قبل ازالته. قم بايقاف تشغيل الحاسب ونزع كل أسلاك الطاقة من المخارج الكهربائية وقم أيضا بازالة حزمة البطارية ثم قم بفصل أي كابلات متصلة.

Downloaded from LpManual.com Manuals

PERIGO

Antes de ligar o computador após a substituição da FRU, certifique-se de que todos os parafusos, molas e outras peças pequenas estejam no lugar e não estejam soltos dentro do computador. Verifique isso sacudindo o computador e procurando ouvir sons de peças soltas. Peças metálicas ou lascas de metal podem causar curto-circuito.

PERIGO

Algumas baterias reserva contêm uma pequena quantidade de níquel e cádmio. Não desmonte uma bateria reserva, recarregue-a, jogue-a no fogo ou na água, ou deixe-a entrar em curto-circuito. Descarte a bateria conforme requerido pelas leis ou regulamentos locais. Use somente a bateria nas partes listadas apropriadas. O uso de uma bateria incorreta pode resultar em combustão ou explosão da bateria.

PERIGO

O pacote da bateria contém uma pequena quantidade de níquel. Não o desmonte, jogue-o no fogo ou na água, ou deixe-o entrar em curto-circuito. Descarte o pacote da bateria conforme requerido pelas leis ou regulamentos locais. Use somente a bateria nas partes listadas apropriadas ao substituir o pacote da bateria. O uso de uma bateria incorreta pode resultar em combustão ou explosão da bateria.

PERIGO

A bateria de lítio pode causar incêndio, explosão ou graves queimaduras. Não a recarregue, remova seu conector polarizado, desmonte-a, aqueça-a acima de 100°C (212°F), incinere-a, ou exponha o conteúdo de sua célula à água. Descarte a bateria conforme requerido pelas leis ou regulamentos locais. Use somente a bateria nas partes listadas apropriadas. O uso de uma bateria incorreta pode resultar em combustão ou explosão da bateria.

PERIGO

Se o LCD quebrar e o fluido de dentro dele entrar em contato com seus olhos ou com suas mãos, lave as áreas afetadas imediatamente com água durante pelo menos 15 minutos. Procure cuidados médicos se algum sintoma causado pelo fluido surgir após a lavagem.

Downloaded from LpManual.com Manuals

PERIGO

Embora as principais baterias possuam baixa voltagem, uma bateria em curto-circuito ou aterrada pode produzir corrente o bastante para queimar materiais de pessoal ou inflamáveis.

PERIGO

A menos que uma hot swap seja permitida para a FRU que está sendo substituída, faça o seguinte antes de removê-la: desligue o computador, desconecte todos os cabos de energia das tomadas, remova o pacote de baterias e desconecte quaisquer cabos de interconexão.

Downloaded from LpManual.com Manuals

DANGER

Avant de remettre l'ordinateur sous tension après remplacement d'une unité en clientèle, vérifiez que tous les ressorts, vis et autres pièces sont bien en place et bien fixées. Pour ce faire, secouez l'unité et assurez-vous qu'aucun bruit suspect ne se produit. Des pièces métalliques ou des copeaux de métal pourraient causer un court-circuit.

DANGER

Certaines batteries de secours contiennent du nickel et du cadmium. Ne les démontez pas, ne les rechargez pas, ne les exposez ni au feu ni à l'eau. Ne les mettez pas en court-circuit. Pour les mettre au rebut, conformez-vous à la réglementation en vigueur. Lorsque vous remplacez la pile de sauvegarde ou celle de l'horloge temps réel, veillez à n'utiliser que les modèles cités dans la liste de pièces détachées adéquate. Une batterie ou une pile inappropriée risque de prendre feu ou d'exploser.

DANGER

La batterie contient du nickel. Ne la démontez pas, ne l'exposez ni au feu ni à l'eau. Ne la mettez pas en court-circuit. Pour la mettre au rebut, conformez-vous à la réglementation en vigueur. Lorsque vous remplacez la batterie, veillez à n'utiliser que les modèles cités dans la liste de pièces détachées adéquate. En effet, une batterie inappropriée risque de prendre feu ou d'exploser.

DANGER

La pile de sauvegarde contient du lithium. Elle présente des risques d'incendie, d'explosion ou de brûlures graves. Ne la rechargez pas, ne retirez pas son connecteur polarisé et ne la démontez pas. Ne l'exposez pas à une temperature supérieure à 100°C, ne la faites pas brûler et n'en exposez pas le contenu à l'eau. Mettez la pile au rebut conformément à la réglementation en vigueur. Une pile inappropriée risque de prendre feu ou d'exploser.

DANGER

Si le panneau d'affichage à cristaux liquides se brise et que vous recevez dans les yeux ou sur les mains une partie du fluide, rincez-les abondamment pendant au moins quinze minutes. Consultez un médecin si des symptômes persistent après le lavage.

Downloaded from LpManual.com Manuals

DANGER

Bien que le voltage des batteries principales soit peu élevé, le court-circuit ou la mise à la masse d'une batterie peut produire suffisamment de courant pour brûler des matériaux combustibles ou causer des brûlures corporelles graves.

DANGER

Si le remplacement à chaud n'est pas autorisé pour l'unité remplaçable sur site que vous remplacez, procédez comme suit avant de retirer l'unité : mettez l'ordinateur hors tension, débranchez tous les cordons d'alimentation des prises de courant, retirez le bloc de batterie et déconnectez tous les câbles d'interconnexion.

Downloaded from LpManual.com Manuals

VORSICHT

Bevor nach einem FRU-Austausch der Computer wieder angeschlossen wird, muß sichergestellt werden, daß keine Schrauben, Federn oder andere Kleinteile fehlen oder im Gehäuse vergessen wurden. Der Computer muß geschüttelt und auf Klappergeräusche geprüft werden. Metallteile oder-splitter können Kurzschlüsse erzeugen.

VORSICHT

Die Bereitschaftsbatterie, die sich unter dem Diskettenlaufwerk befindet, kann geringe Mengen Nickel und Cadmium enthalten. Sie darf nur durch die Verkaufsstelle oder den IBM Kundendienst ausgetauscht werden. Sie darf nicht zerlegt, wiederaufgeladen, kurzgeschlossen, oder Feuer oder Wasser ausgesetzt werden. Die Batterie kann schwere Verbrennungen oder Verätzungen verursachen. Bei der Entsorgung die örtlichen Bestimmungen für Sondermüll beachten. Beim Ersetzen der Bereitschafts-oder Systembatterie nur Batterien des Typs verwenden, der in der Ersatzteilliste aufgeführt ist. Der Einsatz falscher Batterien kann zu Entzündung oder Explosion führen.

VORSICHT

Akkus enthalten geringe Mengen von Nickel. Sie dürfen nicht zerlegt, wiederaufgeladen, kurzgeschlossen, oder Feuer oder Wasser ausgesetzt werden. Bei der Entsorgung die örtlichen Bestimmungen für Sondermüll beachten. Beim Ersetzen der Batterie nur Batterien des Typs verwenden, der in der Ersatzteilliste aufgeführt ist. Der Einsatz falscher Batterien kann zu Entzündung oder Explosion führen.

VORSICHT

Die Systembatterie ist eine Lithiumbatterie. Sie kann sich entzünden, explodieren oder schwere Verbrennungen hervorrufen. Batterien dieses Typs dürfen nicht aufgeladen, zerlegt, über 100°C erhitzt oder verbrannt werden. Auch darf ihr Inhalt nicht mit Wasser in Verbindung gebracht oder der zur richtigen Polung angebrachte Verbindungsstecker entfernt werden. Bei der Entsorgung die örtlichen Bestimmungen für Sondermüll beachten. Beim Ersetzen der Batterie nur Batterien des Typs verwenden, der in der Ersatzteilliste aufgeführt ist. Der Einsatz falscher Batterien kann zu Entzündung oder Explosion führen.

VORSICHT

Die Leuchtstoffröhre im LCD-Bildschirm enthält Quecksilber. Bei der Entsorgung die örtlichen Bestimmungen für Sondermüll beachten. Der LCD-Bildschirm besteht aus Glas und kann zerbrechen, wenn er unsachgemäß behandelt wird oder der Computer auf den Boden fällt. Wenn der Bildschirm beschädigt ist und die darin befindliche Flüssigkeit in Kontakt mit Haut und Augen gerät, sollten die betroffenen Stellen mindestens 15 Minuten mit Wasser abgespült und bei Beschwerden anschließend ein Arzt aufgesucht werden.

Downloaded from LpManual.com Manuals

VORSICHT

Obwohl Hauptbatterien eine niedrige Spannung haben, können sie doch bei Kurzschluß oder Erdung genug Strom abgeben, um brennbare Materialien zu entzünden oder Verletzungen bei Personen hervorzurufen.

VORSICHT

Wenn ein Austausch der FRU bei laufendem Betrieb nicht erlaubt ist, gehen Sie beim Austausch der FRU wie folgt vor: Schalten Sie den Computer aus, ziehen Sie alle Netzkabel von den Netzsteckdosen ab, entfernen Sie den Akku und ziehen Sie alle miteinander verbundenen Kabel ab.

Downloaded from LpManual.com Manuals

סכנה

לפני הפעלת המחשב לאחר החלפת FRU יש לוודא שכל הברגים, הקפיצים, וחלקים קטנים אחרים נמצאים במקומם ואינם חופשיים לזוז בתוך המחשב. כדי לוודא זאת, יש לטלטל את המחשב ולהקשיב לגילוי קולות שקשוק. חלקי או שבבי מתכת עלולים לגרום לקצרים חשמליים.

סכנה

סוללות המתנה מסוימות מכילות כמות קטנה של ניקל וקדמיום. אין לפרק סוללת המתנה, לטעון אותה מחדש, להשליך אותה לאש או למים או לקצר אותה. יש לסלק את הסוללה כנדרש על ידי התקנות והחוקים המקומיים. יש להשתמש רק בסוללה המופיעה ברשימת החלקים המתאימה. שימוש בסוללה לא מתאימה עלול לגרום להצתה או התפוצצות של הסוללה.

סכנה

מארז הסוללה מכיל כמות קטנה של ניקל וקדמיום. אין לפרק את מארז הסוללה, להשליך אותו לאש או למים או לקצר אותו. יש לסלק את מארז הסוללה כנדרש על ידי התקנות והחוקים המקומיים. יש להשתמש רק בסוללה המופיעה ברשימת החלקים המתאימה בזמן החלפת מארז הסוללה. שימוש בסוללה לא מתאימה עלול לגרום להצתה או התפוצצות של הסוללה.

סכנה

סוללת הליתיום עלולה לגרום לשריפה, להתפוצצות או לכוויות קשות. אין לטעון אותה מחדש, לסלק את המחבר המקוטב שלה, לפרק אותה או לחמם אותה לטמפרטורה העולה על 100 מעלות צלזיוס. אין לשרוף את הסוללה ואין לחשוף את תוכן התא למים. יש לסלק את הסוללה כנדרש בתקנות ובחוקים המקומיים. יש להשתמש רק בסוללה המופיעה ברשימת החלקים המתאימים. שימוש בסוללה אחרת עלול לגרום לסכנת שריפה או התפוצצות.

סכנה

אם מסך הגביש הנוזלי (LCD) נשבר והנוזל מתוך המסך בא במגע עם עיניכם או ידיכם, שטפו את האזורים הנגועים מיד במים במשך 15 דקות לפחות. פנו לקבלת עזרה רפואית אם תסמינים הנובעים מהמגע עם הנוזל נמשכים לאחר השטיפה.

סכנה

אף שהסוללות הראשיות הן בעלות מתח נמוך, סוללה מקוצרת או מוארקת עלולה להפיק זרם מספיק לגרימת כוויות או להצתת חומרים דליקים.

סכנה

אלא אם כן מותרת 'החלפה חמה' של ה-FRU המוחלף, פעלו כדלהלן לפני הסרתו:
כבו את המחשב, נתקו את כל כבלי החשמל מהשקעים, הוציאו את מארז הסוללות ונתקו את כל הכבלים המחוברים.

Downloaded from LpManual.com Manuals

危険

FRU の交換後、 ThinkPad の電源を入れる前に、ねじ、バネ、その他の小さな部品がすべて正しい位置にあり、また ThinkPad の内部で緩んでいないことを確認してください。
これを確認するには、 ThinkPad を振って、カチャカチャと音がしないか確かめます。金属部品や金属破片はショートの原因になることがあります。

危険

予備バッテリーの中には少量のニッケルとカドミウムが含まれているものがあります。したがって、予備バッテリーの分解、再充電、火または水の中への投棄、またはショートさせることは決して行わないでください。バッテリーを廃棄する場合は地方自治体の条例に従ってください。適切なパーツ・リストにあるバッテリーだけを使用してください。誤ったバッテリーを使用すると、バッテリーが発火したり、爆発したりすることがあります。

危険

バッテリー・パックには少量のニッケルが含まれています。バッテリー・パックを分解したり、火または水の中に投げ込んだり、ショートさせないでください。バッテリー・パックの廃棄にあたっては、地方自治体の条例または規則に従ってください。バッテリー・パックを交換するときは、適切なパーツ・リストにあるバッテリーだけを使用してください。誤ったバッテリーを使用すると、バッテリーが発火したり、爆発したりすることがあります。

危険

リチウム・バッテリーは、火災、爆発、または重症のやけどを引き起こすことがあります。バックアップ・バッテリーの充電、その極性コネクターの取り外し、バッテリー本体の分解、
100 ℃ (212 ˚ F) 以上への加熱、焼却、電池の中身を水に浸すことはしないでください。バッテリーを廃棄する場合は地方自治体の条例に従ってください。適切なパーツ・リストにあるバッテリーだけを使用してください。誤ったバッテリーを使用すると、バッテリーが発火したり、爆発したりすることがあります。

危険

LCD が破損し、 LCD の中の液体が目に入ったり、手に触れたりした場合は、液体が触れた部分を少なくとも 15 分間洗い流してください。洗い流した後に、液体によって何らかの症状が現れた場合は、医師の治療を受けてください。

Downloaded from LpManual.com Manuals

危険

メイン・バッテリーの電圧は低くても、ショートしたり、接地したバッテリーが、作業者にやけどを負わせたり、可燃物を燃やすだけの電流を発生させる場合があります。

危険

交換しようとしている FRU がホット・スワップに対応していない場合、それを取り外す前に、コンピューターの電源をオフにし、すべての電源コードをコンセントから抜き、バッテリー・パックを取り外して、相互接続しているケーブルをすべて切り離してください。

Downloaded from LpManual.com Manuals

위험

FRU를 교체하고 나서 컴퓨터 전원을 켜기 전에 모든 나사, 스프링 및 기타 작은 부품들이 올바른 위치에 있는지, 컴퓨터 내부에 단단하게 연결되어 있는지 확인하십시오. 컴퓨터를 흔들어 달깍거리는 소리가 나지 않는지 확인하십시오. 금속 부품 또는 금속 조각은 누전을 일으킬 수 있습니다.

위험

일부 보조 배터리에는 소량의 니켈 및 카트뮴이 포함되어 있습니다. 보조 배터리를 분해하거나, 다시 충전하거나, 불 또는 물에 던지거나, 단락시키지 마십시오. 배터리 팩을 폐기할 때에는 해당 지역의 법률 규정을 따르십시오. 배터리 팩을 교체할 때에는 올바른 배터리만 사용하십시오. 올바르지 않은 배터리를 사용하면 배터리가 발화되거나 폭발할 수 있습니다.

위험

배터리 팩에는 소량의 니켈이 포함되어 있습니다. 배터리 팩을 분해하거나, 불 또는 물에 던지거나, 단락시키지 마십시오. 배터리 팩을 폐기할 때에는 해당 지역의 법률 규정을 따르십시오. 배터리 팩을 교체할 때에는 올바른 배터리만 사용하십시오. 올바르지 않은 배터리를 사용하면 배터리가 발화되거나 폭발할 수 있습니다.

위험

리튬 배터리는 화재, 폭발 또는 심각한 화상을 일으킬 수 있습니다. 리튬 배터리를 다시 충전하거나, 극성 커넥터를 제거하거나, 분해하거나, 100C(212F) 이상으로 가열하거나, 소각하거나, 전지 내용물을 물에 노출시키지 마십시오. 배터리를 폐기할 때에는 해당 지역을 법률 규정을 따르십시오. 올바른 배터리만 사용하십시오. 올바르지 않은 배터리를 사용하면 배터리가 발화되거나 폭발할 수 있습니다.

위험

LCD가 파손되어 LCD 내부의 액체가 눈에 들어가거나 손에 묻으면 즉시 깨끗한 물로 15분 이상 닦아 내십시오. 씻은 후에 조금이라도 이상을 느끼면 즉시 병원에 가서 의사의 진찰을 받아야 합니다.

Downloaded from LpManual.com Manuals

위험

기본 배터리의 전압은 낮지만, 단락되거나 접지된 배터리는 화상을 입히기에 충분한 전류와 가연성 물질을 발생시킬 수 있습니다.

위험

FRU 교체 시 Hot Swap이 지원되지 않는 경우, FRU를 제거하기 전에 컴퓨터의 전원을 끄고, 전기 콘센트에서 전원 코드를 분리하고, 배터리를 제거한 후, 연결된 모든 케이블을 분리하십시오.

PELIGRO

Antes de encender el sistema despues de sustituir una FRU, compruebe que todos los tornillos, muelles y demás piezas pequeñas se encuentran en su sitio y no se encuentran sueltas dentro del sistema. Compruébelo agitando el sistema y escuchando los posibles ruidos que provocarían. Las piezas metálicas pueden causar cortocircuitos eléctricos.

PELIGRO

Algunas baterías de reserva contienen una pequeña cantidad de níquel y cadmio. No las desmonte, ni recargue, ni las eche al fuego o al agua ni las cortocircuite. Deséchelas tal como dispone la normativa local. Utilice sólo baterías que se encuentren en la lista de piezas. La utilización de una batería no apropiada puede provocar la ignición o explosión de la misma.

PELIGRO

Las baterías contienen pequeñas cantidades de níquel. No las desmonte, ni recargue, ni las eche al fuego o al agua ni las cortocircuite. Deséchelas tal como dispone la normativa local. Utilice sólo baterías que se encuentren en la lista de piezas al sustituir la batería. La utilización de una batería no apropiada puede provocar la ignición o explosión de la misma.

PELIGRO

La batería de repuesto es una batería de litio y puede provocar incendios, explosiones o quemaduras graves. No la recargue, ni quite el conector polarizado, ni la desmonte, ni caliente por encima de los 100°C (212°F), ni la incinere ni exponga el contenido de sus celdas al agua. Deséchela tal como dispone la normativa local.

PELIGRO

Si la LCD se rompe y el fluido de su interior entra en contacto con sus ojos o sus manos, lave inmediatamente las áreas afectadas con agua durante 15 minutos como mínimo. Obtenga atención medica si se presenta algún síntoma del fluido despues de lavarse.

Downloaded from LpManual.com Manuals

PELIGRO

Aunque las baterías principales tienen un voltaje bajo, una batería cortocircuitada o con contacto a tierra puede producir la corriente suficiente como para quemar material combustible o provocar quemaduras en el personal.

PELIGRO

Salvo que se permita el intercambio en caliente para la unidad sustituible localmente, realice lo siguiente antes de extraerla: apague el sistema, desconecte todos los cables de alimentación de las tomas de alimentación eléctrica, extraiga la batería y desconecte los cables de interconexión.

Downloaded from LpManual.com Manuals

危險

完成 FRU 更換之後，在開啟電腦的電源之前，請確定所有螺絲、彈簧及其他小零件都已歸位，沒有遺留在電腦內部。
若要確認這一點，請搖晃電腦，聽聽看是否有卡嗒的聲響。
金屬零件或儀錶的火花會造成電線短路。

危險

部分備用電池含有微量的鎳和鎘。請勿拆開備用電池、再充電、丟入火或水中，或使其形成短路。請按照當地法令或規定來棄置電池。

僅限使用零件清單中的電池。使用不適當的電池會導致電池起火或爆炸。

危險

電池套件含有微量的鎳。請勿拆開電池套件、丟入火或水中，或使其形成短路。請按照當地法令或規定來棄置電池套件。

更換電池套件時，僅限使用零件清單中的電池。使用不適當的電池會導致電池起火或爆炸。

危險

鋰電池會導致起火、爆炸或嚴重燒傷。請勿再充電、拔除其電極接頭、拆開、加熱超過 100°C (212°F) 、焚燒，或讓電池組成物浸到水。請按照當地法令或規定來棄置電池。
僅限使用零件清單中的電池。使用不適當的電池會導致電池起火或爆炸。

危險

如果 LCD 破裂導致 LCD 流出的液體沾到您的眼睛或手，請立即以清水沖洗沾染部位至少 15 分鐘。如果在清洗後出現該液體所造成的任何症狀，請就醫治療。

危險

雖然主電池的電壓很低，但短路或接地電池所產生的電流，仍足以使人燒傷或使可燃物質起火。

危險

除非 FRU 允許以熱抽換來替換，否則請依下列方式將其移除：將電腦關機，拔除插座上所有電源線，移除電池包，並拔開任何交互連接的線材。

Downloaded from LpManual.com Manuals

Laser compliance statement (multilingual translations)

The laser compliance statements in this section are provided in the following languages:

- English
- Arabic
- Brazilian Portuguese
- French
- German
- Hebrew
- Japanese
- Korean
- Spanish
- Traditional Chinese

CAUTION:
When laser products (such as CD-ROMs, DVD drives, fiber optic devices, or transmitters) are installed, note the following:

- **Do not remove the covers. Removing the covers of the laser product could result in exposure to hazardous laser radiation. There are no serviceable parts inside the device.**
- **Use of controls or adjustments or performance of procedures other than those specified herein might result in hazardous radiation exposure.**

DANGER

Some laser products contain an embedded Class 3A or Class 3B laser diode. Note the following.

Laser radiation when open. Do not stare into the beam, do not view directly with optical instruments, and avoid direct exposure to the beam.

Downloaded from LpManual.com Manuals

تحذير:
عند تثبيت منتجات الليزر (مثل أقراص CD-ROM أو محركات تشغيل أقراص DVD أو أجهزة الألياف البصرية أو النواقل)، لاحظ ما يلي:

- **لا تقم بنزع الغطاء. قد ينتج عن نزع غطاء منتج ليزر التعرض لأشعة ليزر في منتهى الخطورة. لا توجد أجزاء يمكن صيانتها داخل الجهاز.**
- **قد ينتج عن استخدام مفاتيح أو تنفيذ عمليات ضبط أو اجراءات بطريقة مختلفة عما هو محدد هنا التعرض لأشعة ليزر في منتهى الخطورة.**

خطر

تحتوي بعض منتجات الليزر على صمام ثنائي ليزري مضمن من Class 3A أو Class 3B. لاحظ ما يلي.
توجد أشعة ليزر عند الفتح. لا تنظر للشعاع ولا تنظر بطريقة مباشرة باستخدام أدوات ضوئية وتجنب التعرض المباشر للشعاع.

Downloaded from LpManual.com Manuals

CUIDADO:
Quando produtos a laser (como CD-ROMs, unidades de DVD, dispositivos de fibra ótica ou transmissores) estão instalados, observe o seguinte:

- **Não remova as tampas. A remoção das tampas do produto a laser pode resultar em exposição prejudicial à radiação de laser. Não há peças que permitam manutenção no interior do dispositivo.**
- **A utilização de controles ou ajustes ou a execução de procedimentos diferentes daqueles especificados aqui pode resultar em exposição perigosa à radiação.**

PERIGO

Algumas produtos a laser contêm um diodo de laser Classe 3A ou Classe 3B integrado. Observe o seguinte:

Radiação a laser quando aberta. Não olhe diretamente para o feixe a olho nu ou com instrumentos óticos e evite exposição direta ao feixe.

Downloaded from LpManual.com Manuals

ATTENTION :
Si des produits laser (tels que des unités de CD, DVD, à fibre optique ou des émetteurs) sont installés, lisez les informations suivantes :

- **Ne retirez pas les carters. En ouvrant le produit laser, vous vous exposez au rayonnement dangereux du laser. Aucune pièce de l'unité n'est réparable.**
- **Pour éviter tout risque d'exposition au rayon laser, respectez les consignes de réglage et d'utilisation des commandes, ainsi que les procédures décrites dans le présent manuel.**

DANGER

Certains produits à laser contiennent une diode à laser intégrée de classe 3A ou 3B. Prenez connaissance des informations suivantes.

Rayonnement laser lorsque le carter est ouvert. Evitez toute exposition directe au rayon laser. Evitez de regarder fixement le faisceau ou de l'observer à l'aide d'instruments optiques.

Downloaded from LpManual.com Manuals

Vorsicht:
Bei der Installation von Lasergeräten (wie CD-ROM-Laufwerken, DVD-Laufwerken, Einheiten mit Lichtwellenleitertechnik oder Sendern) Folgendes beachten:

- **Die Abdeckungen nicht entfernen. Durch Entfernen der Abdeckungen des Lasergeräts können gefährliche Laserstrahlungen freigesetzt werden. Das Gerät enthält keine zu wartenden Teile.**
- **Werden Steuerelemente, Einstellungen oder Durchführungen von Prozeduren anders als hier angegeben verwendet, kann gefährliche Laserstrahlung auftreten.**

Gefahr

Einige Lasergeräte enthalten eine Laserdiode der Klasse 3A oder 3B. Beachten Sie Folgendes:

Laserstrahlung bei geöffneter Verkleidung. Nicht in den Strahl blicken. Keine Lupen oder Spiegel verwenden. Strahlungsbereich meiden.

זהירות:
כאשר מוצרי לייזר (כגון תקליטורים, כונני DVD, התקני סיבים אופטיים או משדרים) מותקנים, שימו לב להנחיות הבאות:

- **אל תסירו את הכיסויים. הסרת הכיסויים של מוצר הלייזר עלולה לגרום לחשיפה מסוכנת לקרינת לייזר. ההתקן אינם כוללים רכיבים להחלפה עצמית.**
- **שימוש בבקרות ובהתאמות שלא צוינו או ביצוע תהליכים שלא צוינו, יכולים לגרום לחשיפה מסוכנת לקרינה.**

סכנה

כמה ממוצרי הלייזר מכילים דיודת לייזר מובנית Class 3A או Class 3B. שימו לב לדברים שלהלן.
קיימת פליטת קרני לייזר כאשר המוצר פתוח. אל תביטו ישירות אל הקרן, אל תביטו אל הקרן ישירות דרך אמצעים אופטיים, והימנעו מחשיפה ישירה לקרן.

Downloaded from LpManual.com Manuals

警告：
レーザー製品 (CD-ROM、DVD ドライブ、光ファイバー装置、または送信機など) を取り付ける場合には、以下のことに注意してください。

- カバーを外さないこと。カバーを取り外すと有害なレーザー光を浴びることがあります。この装置の内部には保守が可能な部品はありません。
- 本書で指定された内容以外の、お客様による整備、調整、または手順を行った場合、レーザー放射の危険があります。

危険

一部のレーザー製品には、クラス 3A またはクラス 3B のレーザ ー・ダイオードが組み込まれています。次の点に注意してください。

開けるとレーザー光が放射されます。光線を見つめたり、光学機械を使って直接見たり、光線を直接浴びることは避けてください。

경고:
레이저 제품(CD-ROM, DVD 드라이브, 광섬유 장치 또는 송신기)이 설치되어 있는 경우, 다음과 같은 취급 주의사항을 참고하십시오.

- **덮개를 제거하지 마십시오. 레이저 제품의 덮개를 제거하면 유해한 레이저 복사에 노출될 위험이 있습니다. 장치 내부에는 사용자가 수리할 수 있는 부분이 없습니다.**
- **본 내용에서 설명한 이외의 방법으로 드라이브를 조정하거나 제어 또는 작동하는 경우, 해로운 레이저 복사에 노출될 수 있습니다.**

위험

일부 레이저 제품은 임베디드 클래스 3A 또는 클래스 3B 레이저 다이오드가 포함되어 있습니다. 다음 주의사항을 유의하십시오.

드라이브의 덮개를 열면 전자파가 발생합니다. 광선 또는 광 장치를 직접 보거나 광선에 노출되지 않도록 주의하십시오.

Downloaded from LpManual.com Manuals

PRECAUCIÓN:
Cuando haya instalados productos láser (por ejemplo, unidades de CD-ROM, unidades de DVD, dispositivos de fibra óptica o transmisores), tenga en cuenta lo siguiente:

- **No extraiga las cubiertas. La extracción de las cubiertas del producto láser podría producir una exposición a radiación láser peligrosa. No hay ninguna pieza dentro del dispositivo que pueda reparar.**
- **La utilización de controles, ajustes o la realización de procedimientos diferentes a los especificados puede dar como resultado una exposición peligrosa a radiaciones.**

PELIGRO

Algunos productos láser contienen un diodo láser de Clase 3A o Clase 3B incorporado. Tenga en cuenta lo siguiente.

Emite radiación láser cuando está abierto. No fije la vista en el rayo, no lo mire directamente con instrumentos ópticos y evite la exposición directa al rayo.

警告：
安裝雷射產品（如 CD-ROM、DVD 光碟機、光纖裝置或轉送器）時，請注意下列事項：

- **請勿卸下外蓋。卸下雷射產品的外蓋可能導致曝露於危險的雷射輻射。裝置內沒有可維修的零件。**
- **若不遵守本文規定的控制、調整或操作程序，可能會導致危險的輻射外洩。**

危險

某些雷射產品包含內嵌式 3A 類或 3B 類雷射二極體。這類光碟機的使用者應注意下列聲明。

在開啟光碟機時，會有雷射輻射。請勿直視光束或以光學儀器直接觀看光束，並避免直接暴露在光束中。

Downloaded from LpManual.com Manuals

Chapter 2. Important service information

This chapter presents following important service information that applies to all machine types supported by this manual:

- "Strategy for replacing FRUs" on page 29
  - "Strategy for replacing a hard disk drive" on page 30
  - "Important notice for replacing a system board" on page 30
  - "How to use error message" on page 30
- "Strategy for replacing FRUs for CTO, CMV, and GAV" on page 30
  - "Product definition" on page 30
  - "FRU identification for CTO, CMV, and GAV products" on page 31

Important: BIOS and device driver fixes are customer-installable. The BIOS and device drivers are posted on the customer support site http://www.lenovo.com/support/phone

System Disassembly/Reassembly videos that show the FRU removals or replacements for the Lenovo® authorized service technicians are available in the following support site: http://www.lenovoservicetraining.com/ion/

Strategy for replacing FRUs

Before replacing parts:
Make sure that all software fixes, drivers, and BIOS downloads are installed before replacing any FRUs listed in this manual.

After a system board is replaced, ensure that the latest BIOS is loaded to the system board before completing the service action.

To download software fixes, drivers, and BIOS, do as follows:

1. Go to http://support.lenovo.com
2. Enter the product number of the computer or press Auto-detect button on the screen.
3. Select **Downloads and drivers**.
4. Follow the directions on the screen and install the necessary software.

Use the following strategy to prevent unnecessary expense for replacing and servicing FRUs:

- **If you are instructed to replace a FRU but the replacement does not correct the problem, reinstall the original FRU before you continue**.
- Some computers have both a processor board and a system board. If you are instructed to replace either the processor board or the system board, and replacing one of them does not correct the problem, reinstall that board, and then replace the other one.
- If an adapter or a device consists of more than one FRU, any of the FRUs may be the cause of the error. Before replacing the adapter or device, remove the FRUs, one by one, to see if the symptoms change. Replace only the FRU that changed the symptoms.

Attention: The setup configuration on the computer you are servicing may have been customized. Running Automatic Configuration may alter the settings. Note the current configuration settings (using the View Configuration option); then, when service has been completed, verify that those settings remain in effect.

© Copyright Lenovo 2010, 2012

Downloaded from LpManual.com Manuals

Strategy for replacing a hard disk drive

Always try to run a low-level format before replacing a hard disk drive. This will cause all customer data on the hard disk to be lost. Be sure that the customer has a current backup of the data before doing this task.

Attention: The drive startup sequence in the computer you are servicing may have been changed. Be extremely careful during write operations such as copying, saving, or formatting. If you select an incorrect drive, data or programs can be overwritten.

Important notice for replacing a system board

Some components mounted on a system board are very sensitive. Improper handling of a system board can cause damage to those components, and may cause a system malfunction.

Attention: When handling a system board:

- Do not drop a system board or apply any excessive force to it.
- Avoid rough handling of any kind.
- Avoid bending a system board and hard pushing to prevent cracking at each BGA (Ball Grid Array) chipset.

How to use error message

Use the error codes displayed on the screen to diagnose failures. If more than one error code is displayed, begin the diagnosis with the first error code. Whatever causes the first error code may also cause false error codes. If no error code is displayed, see whether the error symptom is listed in the Symptom-to-FRU Index for the computer you are servicing.

Strategy for replacing FRUs for CTO, CMV, and GAV

Product definition

Dynamic Configure To Order (CTO)

This provides the ability for a customer to configure a Lenovo solution from an eSite, and have this configuration sent to fulfillment, where it is built and shipped directly to the customer. The machine label, Product Entitlement Warehouse (PEW), eSupport, and the HMM will load these products as the 4-digit MT and 3-digit model, where model = “CTO” (Example: 1829-CTO).

Custom Model Variant (CMV)

This is a unique configuration that has been negotiated between Lenovo and the customer. A unique 4-digit MT and 3-digit model is provided to the customer to place orders (Example: 1829-W15). A CMV is a special bid offering. Therefore, it is NOT generally announced.

- The MTM portion of the machine label is the 4-digit MT and 3-digit model, where model = “CTO” (Example: 1829-CTO). The PRODUCT ID portion of the machine label is the 4-digit MT and 3-digit CMV model (Example: 1829-W15).
- The PEW record is the 4-digit MT and 3-digit model, where model = “CTO” (Example: 1829-CTO).
- eSupport will show both the CTO and CMV machine type models (Example: 1829-CTO and 1829-W15 will be found on the eSupport site.)
- The HMM will have the 4-digit MT and 3-digit CTO model only (Example: 1829-CTO). Again, CMVs are custom models and are not found in the HMM.

Downloaded from LpManual.com Manuals

General Announce Variant (GAV)

This is a standard model (fixed configuration). GAVs are announced and offered to all customers. The MTM portion of the machine label is a 4-digit MT and 3-digit model, where model = a “fixed part number”, not “CTO” (Example: 1829-F1U). Also, PEW, eSupport, and the HMM will list these products under the same fixed model number.

FRU identification for CTO, CMV, and GAV products

There are three information resources to identify which FRUs are used to support CTO, CMV, and GAV products. These sources are PEW, eSupport, and the HMM.

Using PEW

- **PEW** is the primary source for identifying FRU part numbers and FRU descriptions for the key commodities for CTO, CMV and GAV products at a MT - serial number level. An example of key commodities are hard disk drives, system boards, microprocessors, Liquid Crystal Displays (LCDs), and memory.
- Remember, all CTO and CMV products are loaded in PEW under the 4-digit MT and 3-digit model, where model = “CTO” (Example: 1829-CTO). GAVs are loaded in PEW under the 4-digit MT and 3-digit model, where model = a “fixed part number”, not “CTO” (Example: 1829-F1U).
- PEW can be accessed at the following Web site:
  http://www.lenovo.com/support/site.wss/document.do?lndocid=LOOK-WARNTY
  Select Warranty lookup. Input the MT and the Serial number and the list of key commodities will be returned in the PEW record under COMPONENT INFORMATION.

Using eSupport

For key commodities (examples - hard disk drive, system board, microprocessor, LCD, and memory)

eSupport can be used to view the warranty status of key commodities built in a particular machine serial (this is the same record found in PEW). eSupport can be accessed at http://www.lenovo.com/support.

To view the warranty status of the key commodities on your computer, do the following:

1. Go to http://www.lenovo.com/support.
2. Click **Warranty & Services**.
3. Click **Check Warranty Status**.
4. On the Warranty Status Lookup page, click **Parts Lookup**.
5. Type your machine type and serial number, and then click **Submit**.

For the remaining FRUs (the complete list of FRUs at the MT model level)

eSupport also can be used to view the complete list of FRUs for a machine type and model.

To view the complete list of FRUs, do the following:

1. Go to http://www.lenovo.com/support.
2. Click **Parts & Accessories**.
3. Provide your product information or click **Launch** to automatically identify your product.
4. Click **Product & Parts Detail**.
5. On the PRODUCT AND PARTS DETAIL page, click **Parts Detail** to view the complete list of FRUs.

Using the *Hardware Maintenance Manual*

For key commodities (examples - hard disk drive, system board, microprocessor, LCD, and memory)

Downloaded from LpManual.com Manuals

Use the *Hardware Maintenance Manual* as a backup to PEW and eSupport to view the complete list of FRUs at the MT model level.

Downloaded from LpManual.com Manuals

Chapter 3. General checkout

This chapter presents following information:

- "What to do first" on page 33
- "Checkout guide" on page 34
  - "System supporting the Lenovo ThinkVantage Toolbox program and the PC-Doctor for DOS diagnostics program" on page 34
  - "System supporting the Lenovo diagnostics programs" on page 39
- "Power system checkout" on page 41

The descriptions in this chapter apply to any ThinkPad model that supports the PC-Doctor® for DOS diagnostics program. Some descriptions might not apply to your particular computer.

Before you go to the checkout guide, be sure to read the following important notes.

Important notes:

- **Only certified trained personnel should service the computer.**
- **Before replacing any FRU, read the entire page on removing and replacing FRUs.**
- **When you replace FRUs, it is recommended to use new nylon-coated screws.**
- **Be extremely careful during such write operations as copying, saving, or formatting.** Drives in the computer that you are servicing sequence might have been altered. If you select an incorrect drive, data or programs might be overwritten.
- **Replace a FRU only with another FRU of the correct model.** When you replace a FRU, make sure that the model of the machine and the FRU part number are correct by referring to the FRU parts list.
- **A FRU should not be replaced because of a single, unreproducible failure.** Single failures can occur for a variety of reasons that have nothing to do with a hardware defect, such as cosmic radiation, electrostatic discharge, or software errors. Consider replacing a FRU only when a problem recurs. If you suspect that a FRU is defective, clear the error log and run the test again. If the error does not recur, do not replace the FRU.
- **Be careful not to replace a nondefective FRU.**

What to do first

When you do return a FRU, you must include the following information in the parts exchange form or parts return form that you attach to it:

1. Name and phone number of service technician
2. Date of service
3. Date on which the machine failed
4. Date of purchase
5. Failure symptoms, error codes appearing on the display, and beep symptoms
6. Procedure index and page number in which the failing FRU was detected
7. Failing FRU name and part number
8. Machine type, model number, and serial number
9. Customer's name and address

Note for warranty: During the warranty period, the customer may be responsible for repair costs if the computer damage was caused by misuse, accident, modification, unsuitable physical or operating environment, or improper maintenance by the customer.

Following is a list of some common items that are not covered under warranty and some symptoms that might indicate that the system was subjected to stress beyond normal use.

© Copyright Lenovo 2010, 2012

Downloaded from LpManual.com Manuals

Before checking problems with the computer, determine whether the damage is covered under the warranty by referring to the following list:

The following are not covered under warranty:
- LCD panel cracked from the application of excessive force or from being dropped
- Scratched (cosmetic) parts
- Distortion, deformation, or discoloration of the cosmetic parts
- Plastic parts, latches, pins, or connectors that have been cracked or broken by excessive force
- Damage caused by liquid spilled into the system
- Damage caused by the improper insertion of a PC Card or the installation of an incompatible card
- Improper disc insertion or use of an optical drive
- Diskette drive damage caused by pressure on the diskette drive cover, foreign material in the drive, or the insertion of a diskette with multiple labels
- Damaged or bent diskette eject button
- Fuses blown by attachment of a nonsupported device
- Forgotten computer password (making the computer unusable)
- Sticky keys caused by spilling a liquid onto the keyboard
- Use of an incorrect ac adapter on laptop products

The following symptoms might indicate damage caused by nonwarranted activities:
- Missing parts might be a symptom of unauthorized service or modification.
- If the spindle of a hard disk drive becomes noisy, it may have been subjected to excessive force, or dropped.

Checkout guide

Use the following procedures as a guide in identifying and correcting problems with the ThinkPad Notebook.

Note: The diagnostic tests are intended to test only ThinkPad products. The use of non-ThinkPad products, prototype cards, or modified options can lead to false indications of errors and invalid system responses.

1. Identify the failing symptoms in as much detail as possible.
2. Verify the symptoms. Try to re-create the failure by running the diagnostic test or by repeating the operation.

System supporting the Lenovo ThinkVantage Toolbox program and the PC-Doctor for DOS diagnostics program

The section provides information about ThinkPad computers that support the Lenovo ThinkVantage® Toolbox program and the PC-Doctor® for DOS diagnostics program. Some descriptions might not apply to your particular computer.

Diagnostics using PC-Doctor for DOS

The ThinkPad Notebook has a test program called PC-Doctor for DOS (hereafter called *PC-Doctor*.) You can detect errors by running the diagnostics test included in PC-Doctor.

Note: PC-Doctor for DOS is available at the following Web site: http://support.lenovo.com. To create thePC-Doctor diagnostic CD, follow the instructions on the Web site.

For some possible configurations of the computer,PC-Doctor might not run correctly. To avoid this problem, you need to initialize the computer setup by use of the BIOS Setup Utility before you run PC-Doctor.

To enter BIOS Setup Utility, do as follows:

1. Turn on the computer.
2. When the ThinkPad logo comes up, immediately press F1 to enter the BIOS Setup Utility.

Downloaded from LpManual.com Manuals

Note: If a supervisor password has been set by the customer, BIOS Setup Utility menu appears after the password is entered. You can start BIOS Setup Utility by pressing Enter instead of entering the supervisor password; however, you cannot change the parameters that are protected by the supervisor password.

On the BIOS Setup Utility screen, press F9, Enter, F10, and then Enter.

Note: When you initialize the computer configuration, some devices are disabled, such as the serial port. If you test one of these devices, you will need to enable it by using Configuration utility for DOS. The utility is available on the following Web site: http://support.lenovo.com

PC-Doctor cannot be used to test a device that is in the docking station, even if the computer supports the docking station. To test a USB device, connect it to the USB connector of the computer.

Testing the computer

Note: The PC-Doctor diagnostic CD does not support any optical drives connected through USB devices or any others. It supports only the internal optical drive of the ThinkPad Notebook.

To run the test, do as follows:

1. Turn off the computer.
2. Make sure that the internal optical drive that is supported as a startup device is attached to the computer.
3. Turn on the computer. If the computer cannot be powered on, go to “Power system checkout” on page 41, and check the power sources.

   If an error code appears, go to “Symptom-to-FRU index” on page 50.
4. When the ThinkPad logo comes up, immediately press F12 to enter the Boot Menu.
5. Insert the PC-Doctor CD into the internal optical drive.
6. Press cursor keys to select **ATAPI CDx** (x: 0, 1, ...) and then press Enter.
7. Follow the instructions on the screen.
8. The main panel of PC-Doctor appears.
9. Select **Diagnostics** with the arrow keys, and press Enter.

   Note: You can select an item not only with the arrow keys, but also with the TrackPoint® pointer. Instead of pressing Enter, click the left button.

   A pull-down menu appears. (Its exact form depends on the model.)

   Note: PC-Doctor menu does not mean the formal support device list. Some unsupported device names may appear in the PC-Doctor menu.

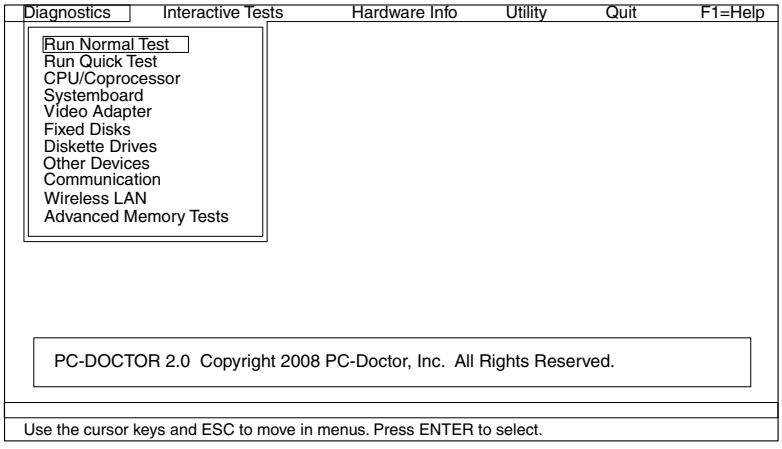

The options on the test menu are as follows:

Downloaded from LpManual.com Manuals

Diagnostics	Interactive Tests
• Run Normal Test • Run Quick Test • CPU/Coprocessor • Systemboard • Video Adapter • Fixed Disks • Diskette Drives • Other Devices • ThinkPad Devices • Communication • Wireless LAN • Advanced Memory Tests	• Keyboard • Video • Internal Speaker • Mouse • Diskette • System Load • Optical Drive Test • Intel WLAN Radio Test
Notes: • In the **Keyboard** test in **Interactive Tests**, the Fn key should be held down for at least 2 seconds; otherwise, it cannot be sensed. • **Video Adapter** test supports only the LCD display on the ThinkPad Notebook. If you have an external monitor attached to your computer, detach it before running PC-Doctor for DOS. • To test **Digital Signature Chip**, the security chip must be set to Active. • To test **Serial Ports** or **Parallel Ports**, the ThinkPad Notebook must be attached to the docking station.	

10. Run the applicable function test.
11. Follow the instructions on the screen. If there is a problem, PC-Doctor shows messages describing it.
12. To exit the test, select **Quit — Exit Diag**. To cancel the test, press Esc.

Note: After running PC-Doctor, check the time and date on the system and reset them if they are incorrect.

Detecting system information with PC-Doctor

PC-Doctor can detect the following system information:

Hardware Info	• System Configuration • Memory Contents • Physical Disk Drives • Logical Disk Drives • VGA Information • IDE Drive Info • PCI Information • PNPISA Info • SMBIOS Info • VESA LCD Info • Hardware Events Log
Utility	• Run External Tests • Surface Scan Hard Disk • Benchmark System • DOS Shell • Tech Support Form • Battery Rundown • View Test Log • Print Log • Save Log • Full Erase Hard Drive • Quick Erase Hard Drive

Downloaded from LpManual.com Manuals

Lenovo ThinkVantage Toolbox (Lenovo System Toolbox)

Lenovo ThinkVantage® Toolbox (Lenovo System Toolbox in Windows Vista® and Windows® XP) is a diagnostic program that works through the Windows operating system. It enables you to view symptoms of computer problems and solutions for them, and includes automatic notification when action is required, computing assistance, advanced diagnostics, and diagnostic history.

Note: The latest Lenovo ThinkVantage Toolbox (Lenovo System Toolbox) is available at the following Web site: http://support.lenovo.comTo install the latest Lenovo ThinkVantage Toolbox (Lenovo System Toolbox) on the computer, follow the instructions on the Web site.

To run this program, do as follows:

Windows 7:
While the Windows operating system is running, press the ThinkVantage button.

You can also run this program as either of the following:

- Click **Start → All Programs → Lenovo ThinkVantage Tools → System Health and Diagnostics**.
- Click **Start → Control Panel → System and Security → Lenovo's System Health and Diagnostics**.

Windows Vista and Windows XP:
Click **Start → All Programs → Lenovo Services**.

Follow the instructions on the screen. Lenovo ThinkVantage Toolbox (Lenovo System Toolbox) also has problem determination aids that determine software and usage problems.

For additional information about this program, see the Help for the program.

PC-Doctor for Windows

In some models of ThinkPad Notebook, PC-Doctor for Windows enables you to troubleshoot and resolve problems related to the computer.

Select one of the categories listed below to display symptoms and solutions:
- Check System Health
- System and Device Tests
- Lenovo Troubleshooting Center
- System Reports
- Updates and Support

PC-Doctor for Rescue and Recovery

In some models of ThinkPad Notebook, the Rescue and Recovery® workspace enables you to run the PC-Doctor program to test the hardware features of the computer.

To run the test, click “Run Diagnostics” on the Rescue and Recovery main screen.

FRU tests

The following table shows the test for each FRU.

Downloaded from LpManual.com Manuals

Table 1. FRU tests

FRU	Applicable test
System board	1. **Diagnostics → CPU/Coprocessor**. 2. **Diagnostics → Systemboard**. 3. If the ThinkPad X200 Ultrabase™ is attached to the ThinkPad computer, detach it. Place the computer on a horizontal surface, and run **Diagnostics → ThinkPad → Devices → HDD Active Protection Test**. **Note:** Do not apply any physical shock to the computer while the test is running.
Power	**Diagnostics → ThinkPad Devices → AC Adapter, Battery 1 (Battery2)**
LCD unit	1. **Diagnostics → Video Adapter** 2. **Interactive Tests → Video**
Audio	Enter the BIOS Setup Utility and change Serial ATA (SATA) setting to **Compatibility**, and run **Diagnostics → Other Device → Conexant Audio**.
Speaker	**Interactive Tests → Internal Speaker** **Note:** Once Modem/Audio test is done, the no sound is heard this test. In this case, turn off and turn on the computer. Then, run this test again.
PC Card slot	**Diagnostics → Systemboard → PCMCIA**
ExpressCard slot	1. Insert a PCI-Express/USB Wrap card into the ExpressCard slot. 2. Turn on the computer. 3. Run **Diagnostics → ThinkPad Devices → ExpressCard slot**.
Keyboard	1. **Diagnostics → Systemboard → Keyboard** 2. **Interactive Tests → Keyboard**
Hard disk drive	Enter the BIOS Setup Utility and change Serial ATA (SATA) setting to **Compatibility**, and run **Diagnostics → Fixed Disks**.
	You can also diagnose the hard disk drive without starting up the operating system. To diagnose the hard disk drive from the BIOS Setup Utility, do as follows: 1. Remove any diskette from the diskette drive, and then turn off the computer. 2. Turn on the computer. 3. While the message, “To interrupt normal startup, press the blue ThinkVangate button,” is displayed at the lower left of the screen, press F1 to enter the BIOS Setup Utility. 4. Using cursor keys, select **HDD diagnostic program**. Press enter. 5. Using cursor keys, select **Main hard disk drive** or **Ultrabay hard disk drive**. 6. Press Enter to start the diagnostic program.
Diskette drive	1. **Diagnostics → Diskette Drives** 2. **Interactive Tests → Diskette**
Optical drive	1. **Diagnostics → Other Devices → Optical Drive** 2. **Interactive Tests → Optical Drive Test**
Memory	1. If two DIMMs are installed, remove one of them and run **Diagnostics → PM Memory**. 2. If the problem does not recur, return the DIMM to its place, remove the other one, and run the test again.
TrackPoint or pointing device	If the TrackPoint does not work, check the configuration as specified in the BIOS Setup Utility. If the TrackPoint is disabled, select **Automatic** to enable it. After you use the TrackPoint, the pointer may drift on the screen for a short time. This drift can occur when a slight, steady pressure is applied to theTrackPoint pointer. This symptom is not a hardware problem. If the pointer stops after a short time, no service action is necessary. If enabling theTrackPoint does not correct the problem, continue with the following: • **Interactive Tests → Mouse**

Downloaded from LpManual.com Manuals

System supporting the Lenovo diagnostics programs

The section provides information about ThinkPad computers that support the Lenovo diagnostics programs. Some descriptions might not apply to your particular computer.

The Lenovo diagnostics programs include the following:

- Lenovo Solution Center
- Quick test programs
- UEFI diagnostic program
- Bootable diagnostic programs

Lenovo Solution Center

The Lenovo Solution Center program enables you to troubleshoot and resolve computer problems. It combines diagnostic tests, system information collection, security status, and support information, along with hints and tips for maximum system performance.

Note: The Lenovo Solution Center program is available only on models preinstalled with the Windows 7 operating system. It also can be downloaded from http://www.lenovo.com/diags.

To run the Lenovo Solution Center program, click **Start → Control Panel → System and Security → Lenovo - System Health and Diagnostics**, and then follow the instructions on the screen.

For additional information about this program, see the help information system.

Quick test programs

Lenovo Hard Drive Quick Test and Lenovo Memory Quick Test are two quick test programs that enable you to troubleshoot and resolve computer internal storage and memory problems.

Notes:

- If the computer you are servicing is not installed with the Lenovo Solution Center program, you can download the quick test programs from the Lenovo Support Web site.
- The two programs are applicable to computers installed with the Windows 7, Windows XP, Windows Server 2003, or Windows Server 2008 operating system.

To download and install a quick test program, go to http://www.lenovo.com/diags, and follow the instructions on the Web site.

To run a quick test using the downloaded program, do the following:

1. Go to the C:\SWTOOLS\ldiag folder.
2. Double-click the gui_lsc_lite.exe file.
3. When the **User Account Control** window opens, click **Yes**.
4. Select the device class to be tested.
5. Select the devices to be tested.
6. Select the tests to be performed.
7. Follow the instructions on the screen to start the test. When a problem is detected, information messages will be displayed. Refer to the messages to troubleshoot the problem.

UEFI diagnostic program

A UEFI diagnostic program is preinstalled on the computer. It enables you to test memory and internal storage problems, view system information, and check and recover bad sectors on internal storage devices.

Downloaded from LpManual.com Manuals

To run the UEFI diagnostic program, do the following:

1. Turn on the computer. If the computer cannot be turned on, go to “Power system checkout” on page 41, and check the power sources. If an error code is displayed, go to “Symptom-to-FRU index” on page 50 for error code descriptions and troubleshooting hints.
2. When the ThinkPad logo is displayed, repeatedly press and release the F12 key. When the Boot Menu window opens, release the F12 key.
3. Press the Tab key to switch to the Application Menu window.
4. Use the arrow keys to select **Lenovo Diagnostics** and then press Enter. The main screen of the UEFI diagnostic program is displayed.
5. Follow the instructions on the screen to use the diagnostic program.

The options on the main screen are as follows:

Tests	Tools
• Quick Memory Test • Quick Storage Device Test • Exit Application	• System Information • Recover Bad Sectors Tool

Bootable diagnostic programs

If the computer you are servicing is not installed with the UEFI diagnostic program, you can download a bootable diagnostic program from the Lenovo Support Web site. The bootable diagnostic programs enable you to test computer memory and internal storage devices, view system information, and check and recover the internal storage devices. To use the bootable diagnostic programs, you can create a bootable diagnostic medium on a USB device or CD.

To create a bootable diagnostic medium, do the following:

1. Go to http://www.lenovo.com/diags.
2. Click **Lenovo Bootable Diagnostics**.
3. Follow the instructions on the Web site to create a bootable diagnostic medium on a USB device or CD.

To use the diagnostic medium you have created, do one of the following:

- If you have created the bootable diagnostic medium on a USB device, do the following:
  1. Attach the USB device to the computer.
  2. Turn on the computer. If the computer cannot be turned on, go to “Power system checkout” on page 41, and check the power sources. If an error code is displayed, go to “Symptom-to-FRU index” on page 50 for error code descriptions and troubleshooting hints.
  3. When the ThinkPad logo is displayed, repeatedly press and release the F12 key. When the Boot Menu window opens, release the F12 key.
  4. Use the arrow keys to select **USB HDD** and then press Enter. The diagnostic program will be launched automatically.
  5. Follow the instructions on the screen to use the diagnostic program.
- If you have created the bootable diagnostic medium on a CD, do the following:
  1. Turn on the computer. If the computer cannot be turned on, go to “Power system checkout” on page 41, and check the power sources. If an error code is displayed, go to “Symptom-to-FRU index” on page 50 for error code descriptions and troubleshooting hints.
  2. Insert the CD into the optical drive.
  3. Restart the computer.

Downloaded from LpManual.com Manuals

4. When the ThinkPad logo is displayed, repeatedly press and release the F12 key. When the Boot Menu window opens, release the F12 key.
5. Use the arrow keys to select **ATAPI CDx** (x: 0, 1, ...) and then press Enter. The diagnostic program will be launched automatically.
6. Follow the instructions on the screen to use the diagnostic program.

Power system checkout

To verify a symptom, do the following:
1. Turn off the computer.
2. Remove the battery pack.
3. Connect the ac adapter.
4. Check that power is supplied when you turn on the computer.
5. Turn off the computer.
6. Disconnect the ac adapter and install the charged battery pack.
7. Check that the battery pack supplies power when you turn on the computer.

If you suspect a power problem, see the appropriate one of the following power supply checkouts:
- “Checking the ac adapter” on page 41
- “Checking operational charging” on page 42
- “Checking the battery pack” on page 42
- “Checking the backup battery” on page 42

Checking the ac adapter

You are here because the computer fails only when the ac adapter is used.

- If the power problem occurs only when the ThinkPad X200 UltraBase is used, replace the UltraBase.
- If the power-on indicator does not turn on, check the power cord of the ac adapter for correct continuity and installation.
- If the computer does not charge during operation, go to “Checking operational charging” on page 42.

To check the ac adapter, do the following:
1. Unplug the ac adapter cable from the computer.
2. Measure the output voltage at the plug of the ac adapter cable. See the following figure:

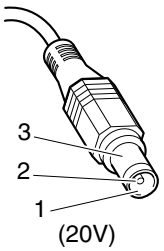

Pin	Voltage (V dc)
1	+20
2	0
3	Ground

Note: Output voltage across pin 2 of the ac power adapter might differ from the one you are servicing.

3. If the voltage is not correct, replace the ac adapter.
4. If the voltage is acceptable, do the following:
   - Replace the system board.
   - If the problem persists, go to “FRU tests” on page 37.

Note: Noise from the ac adapter does not always indicate a defect.

Downloaded from LpManual.com Manuals

Checking operational charging

To check whether the battery charges properly during operation, use a discharged battery pack or a battery pack that has less than 50% of the total power remaining when installed in the computer.

Perform operational charging. If the battery status indicator or icon does not turn on, remove the battery pack and let it return to room temperature. Reinstall the battery pack. If the charge indicator or icon still does not turn on, replace the battery pack.

If the charge indicator still does not turn on, replace the system board. Then reinstall the battery pack. If it is still not charged, go to the next section.

Checking the battery pack

Battery charging does not start until the Power Manager Battery Gauge shows that less than 96% of the total power remains; under this condition the battery pack can charge to 100% of its capacity. This protects the battery pack from being overcharged or from having a shortened life.

To check your battery, move your cursor to the Power Manager Battery Gauge icon in the icon tray of the Windows taskbar and wait for a moment (but do not click), and the percentage of battery power remaining is displayed. To get detailed information about the battery, double-click the Power Manager Battery Gauge icon.

Note: If the battery pack becomes hot, it may not be able to charge. Remove it from the computer and leave it at room temperature for a while. After it cools down, reinstall and recharge it.

To check the battery pack, do the following:

1. Power off the computer.
2. Remove the battery pack and measure the voltage between battery terminals 1 (+) and 7 (-). See the following figure:

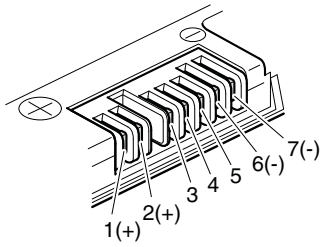

Terminal	Voltage (V dc)
1	+ 0 to + 12.6
7	Ground (-)

3. If the voltage is less than +11.0 V dc, the battery pack has been discharged.

   Note: Recharging will take at least 3 hours, even if the indicator does not turn on.

   If the voltage is still less than +11.0 V dc after recharging, replace the battery.
4. If the voltage is more than +11.0 V dc, measure the resistance between battery terminals 5 and 7. The resistance must be 4 to 30 K Ω. If the resistance is not correct, replace the battery pack. If the resistance is correct, replace the system board.

Checking the backup battery

Do the following:

1. Power off the computer, and unplug the ac adapter from it.
2. Turn the computer upside down.
3. Remove the battery pack (see “1010 Battery pack” on page 71).
4. Remove the backup battery (see “1060 Backup battery” on page 82).

Downloaded from LpManual.com Manuals

5. Measure the voltage of the backup battery. See the following figure.

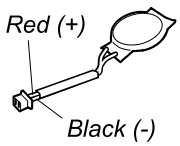

Wire	Voltage (V dc)
Red	+2.5 to +3.2
Black	Ground

- If the voltage is correct, replace the system board.
- If the voltage is not correct, replace the backup battery.
- If the backup battery discharges quickly after replacement, replace the system board.

Downloaded from LpManual.com Manuals

Downloaded from LpManual.com Manuals

Chapter 4. Related service information

This chapter presents following information:

- “Restoring the factory contents by using Product Recovery discs” on page 45
- “Restoring the factory contents by using Recovery Disc Set” on page 45
- “Passwords” on page 47
- “Power management” on page 48
- “Symptom-to-FRU index” on page 50

Service Web site:
When the latest maintenance diskette and the system program service diskette become available, they will be posted on http://support.lenovo.com.

Restoring the factory contents by using Product Recovery discs

When the hard disk drive (HDD) or solid state drive (SSD) is replaced because of a failure, no Product Recovery program is on the new drive. In this case, you must use the recovery discs for the computer. Order the recovery discs and the drive at the same time so that you can recover the new drive with the pre-installed software when they arrive. For information on which discs to order, see “Recovery discs” on page 249.

To install the factory contents by using Product Recovery discs, do the following:

Note: Recovery takes several hours. The length of time depends on the method you use. If you use recovery discs, recovery takes at least five hours.

1. Insert the bootable **Start Recovery Disc** into the DVD drive.
2. Select your language and click **Next**.
3. Read the license. If you agree with the terms, select **I accept these terms and conditions** and then click **Next**.
4. Insert the **Operating System Recovery Disc** when prompted and click **Yes** to begin the operating system recovery process.
5. Insert the **Product Recovery Disc** when prompted and click **OK**.
6. If you have a **Supplemental Recovery Disc**, insert it when prompted and click **Yes**. If you do not have a **Supplemental Recovery Disc**, click **No**.

   Note: Not all recovery disc sets come with a **Supplemental Recovery Disc**. If there is a **Supplemental Recovery Disc**, it will be clearly marked as such.
7. When all of the data has been copied from the last disc in the set, a message is displayed prompting you to restart the computer. Remove the disc and then click **Yes**.

   Note: The remainder of the recovery process is fully automated and no action is required by you. The computer will restart into the Windows desktop several times and you might experience periods when no activity is apparent on the screen for several minutes at a time. This is normal.
8. When the recovery process is complete, the Welcome to Microsoft Windows screen is displayed. Follow the instructions on the screen to complete the Windows setup.

Restoring the factory contents by using Recovery Disc Set

When the hard disk drive (HDD) or solid state drive (SSD) is replaced because of a failure, no product recovery program is on the new drive. In this case, you must use the Recovery Disc Set for the computer. Order the Recovery Disc Set and the drive at the same time so that you can recover the new drive with the pre-installed software when they arrive. For information on which discs to order, see “Recovery discs” on page 249.

© Copyright Lenovo 2010, 2012

Downloaded from LpManual.com Manuals

The recovery disc set consists of the user instructions and the following set of DVDs to restore the computer to the original factory configuration.

Operating System Recovery Disc (one disc)	This disc restores the Microsoft® Windows operating system. Use this disc to start the recovery process.
Applications and Drivers Recovery Disc (one or more discs)	This disc restores the preinstalled applications and drivers on the computer.
Supplemental Recovery Disc	This disc contains additional content, such as updates to the software that was preinstalled on the computer. Not all recovery disc sets come with a *Supplemental Recovery Disc*.

Notes:

- You must have a DVD drive to use the recovery discs. If you do not have an internal DVD drive, you can use an external USB DVD drive.
- During the recovery process, all data on the drive will be deleted. If possible, copy any important data or personal files that you want to keep onto removable media or a network drive before you start the recovery process.

To restore the computer to the original factory configuration using the recovery disc set, do the following:

Note: Recovery takes several hours. The length of time depends on the method you use. If you use recovery discs, recovery takes at least five hours.

1. Make the CD/DVD drive the first startup device in the startup sequence using the following procedure:
   a. Press and hold down the F1 key, and then turn on the computer. When the logo screen is displayed or if you hear repeating beeps, release the F1 key. The Setup Utility program opens.
   b. Use the arrow keys to select **Startup → Boot**.
   c. Select the CD/DVD drive as the **1st Boot Device**.
2. Insert the *Operating System Recovery Disc* into the DVD drive.
3. Press F10 to save the Setup Utility configuration changes. Follow the instructions on the screen to begin the recovery process.
4. Select your language and click **Next**.
5. Read the license. If you agree with the terms and conditions, select **I accept these terms and conditions** and then click **Next**. If you do not agree with the terms and conditions, follow the instructions on the screen.
6. Click **Yes** in the displayed window to begin the operating system recovery process.
7. Insert the *Applications and Drivers Recovery Disc* when prompted and then click **OK** to begin the applications and drivers recovery process.
8. If you have a *Supplemental Recovery Disc*, insert it when prompted and click **Yes**. If you do not have a *Supplemental Recovery Disc*, click **No**.
9. When all of the data has been copied from the last disc in the set and has been processed, remove the disc and restart the computer.

   Note: The rest of the recovery process is fully automated and no action is required by you. The computer will restart into the Microsoft Windows desktop several times and you might experience periods when no activity is apparent on the screen for several minutes at a time. This is normal.
10. When the recovery process is complete, the Set Up Windows screen is displayed. Follow the instructions on the screen to complete the Windows setup.
11. After you have completed the Windows setup, you might want to restore the original startup sequence. Start the Setup Utility program and then press F9 to restore the default settings. Press F10 to save and exit the Setup Utility.

Downloaded from LpManual.com Manuals

Note: After restoring a drive to the factory default settings, you might need to reinstall some device drivers.

Passwords

As many as three passwords may be needed for any ThinkPad Notebook: the power-on password (POP), the hard-disk password (HDP), and the supervisor password (SVP).

If any of these passwords has been set, a prompt for it appears on the screen whenever the computer is turned on. The computer does not start until the password is entered.

Note: If only an SVP is installed, the password prompt does not appear when the operating system is booted.

Power-on password

A power-on password (POP) protects the system from being powered on by an unauthorized person. The password must be entered before an operating system can be booted. For how to remove the POP, see “How to remove the power-on password” on page 47.

Hard-disk password

There are two hard-disk passwords (HDPs):

- User HDP—for the user
- Master HDP—for the system administrator, who can use it to get access to the hard disk even if the user has changed the user HDP

Note: There are two modes for the HDP: **User only** and **Master + User**. The **Master + User** mode requires two HDPs; the system administrator enters both in the same operation. The system administrator then provides the user HDP to the system user.

Attention: If the user HDP has been forgotten, check whether a master HDP has been set. If it has, it can be used for access to the hard disk drive. If no master HDP is available, neither Lenovo nor Lenovo authorized service technicians provide any services to reset either the user or the master HDP, or to recover data from the hard disk drive. The hard disk drive can be replaced for a scheduled fee.

For how to remove the POP, see “How to remove the hard-disk password” on page 48.

Supervisor password

A supervisor password (SVP) protects the system information stored in the BIOS Setup Utility. The user must enter the SVP in order to get access to the BIOS Setup Utility and change the system configuration.

Attention: If the SVP has been forgotten and cannot be made available to the service technician, there is no service procedure to reset the password. The system board must be replaced for a scheduled fee.

How to remove the power-on password

To remove a POP that you have forgotten, do the following:

(A) If no SVP has been set:

1. Turn off the computer and disconnect the ac power adapter.
2. Remove the battery pack. For how to remove the battery pack, see “1010 Battery pack” on page 71.
3. Remove the backup battery. For how to remove the backup battery, see “1060 Backup battery” on page 82.

Downloaded from LpManual.com Manuals

4. Connect the ac power adapter. Turn on the computer and wait until the POST ends. After the POST ends, the password prompt will not be displayed. The power-on password has been removed.
5. Reinstall the backup battery and the battery pack.

(B) If an SVP has been set and is known by the service technician:

1. Turn on the computer.
2. When the ThinkPad logo is displayed, immediately press F1.
3. Type the supervisor password to enter the ThinkPad Setup program.
4. Select **Security**.
5. Select **Password**.
6. Select **Power-On Password**.
7. Type the current supervisor password in the **Enter Current Password** field. Then leave the **Enter New Password** field blank, and press Enter twice.
8. In the Changes have been saved window, press Enter.
9. Press F10 to save changes and exit the ThinkPad Setup program.

How to remove the hard-disk password

Attention: If **User only** mode is selected and the user HDP has been forgotten and cannot be made available to the service technician, neither Lenovo nor Lenovo authorized service technicians provide any services to reset the user HDPs or to recover data from the hard disk drive. The hard disk drive can be replaced for a scheduled fee.

To remove a user HDP that has been forgotten, when the SVP and the master HDP are known, do the following:

1. Turn on the computer.
2. When the ThinkPad logo comes up, immediately press F1 to enter BIOS Setup Utility.For models supporting the Passphrase function, press F1 while HDP icon is appearing on the screen; then enter the master HDP. For the other models, enter the master HDP.

   Note: To check whether the ThinkPad Notebook you are servicing supports the Passphrase function, enter the BIOS Setup Utility and go to **Security → Password**. If **Using Passphrase** item is displayed in the menu, this function is available on the ThinkPad Notebook.
3. Select **Security**, using the cursor directional keys to move down the menu.
4. Select **Password**.
5. Select **Hard-disk *x* password**, where *x* is the letter of the hard disk drive. A pop-up window opens.
6. Select **Master HDP**.
7. Type the current master HDP in the **Enter Current Password** field. then leave the **Enter New Password** field blank, and press Enter twice.
8. Press F10.
9. Select **Yes** in the Setup Configuration window. Both user HDP and master HDP will have been removed.

Power management

To reduce power consumption, the computer has three power management modes: screen blank, sleep (standby in Windows XP), and hibernation.

Screen blank mode

If the time set on the “Turn off monitor” timer in the operating system expires, the LCD backlight turns off.

Downloaded from LpManual.com Manuals

To put the computer into screen blank mode, do as follows:

1. Press Fn+F3. A panel for selecting a power plan (in Windows XP, power scheme) appears.
2. Select **Power off display (keep current power plan)** (in Windows XP, **keep current power scheme**).

You can also put the computer into screen blank mode, press ThinkVantage button and use the ThinkVantage Productivity Center.

Note: If the computer is a Windows 7 model, it does not support ThinkVantage Productivity Center.

To end screen blank mode and resume normal operation, press any key.

Sleep (Standby) mode

When the computer enters sleep (standby) mode, the following events occur in addition to what occurs in screen blank mode:

- The LCD is powered off.
- The hard disk drive or the solid state drive is powered off.
- The CPU stops.

To enter sleep (standby) mode, press Fn+F4.

Note: You can change the action of the Fn+F4 key combination by changing the settings in Power Manager.

In certain circumstances, the computer goes into sleep (standby) mode automatically:

- If a “suspend time” has been set on the timer, and the user does not do any operation with the keyboard, the TrackPoint, the hard disk, the parallel connector, or the diskette drive within that time.
- If the battery indicator blinks orange, indicating that the battery power is low.

Note: Even if you do not set the low-battery alarm, the charge indicator notifies you when the battery is low, and then the computer enters the power-saving mode automatically.

To cause the computer to return from sleep (standby) mode and resume operation, do one of the following:

- Press the Fn key.
- Open the LCD cover.
- Turn on the power switch.

Also, in either of the following events, the computer automatically returns from sleep (standby) mode and resumes operation:

- The ring indicator (RI) is signaled by a serial device or a PC Card device. *(does not support the ring indicator (RI) resume by PC Card device.)*
- The time set on the resume timer elapses.

  Note: The computer does not accept any input immediately after it enters sleep (standby) mode. Wait a few seconds before taking any action to reenter operation mode.

Hibernation mode

In hibernation mode, the following occurs:

- The system status, RAM, VRAM, and setup data are stored on the hard disk.
- The system is powered off.

Downloaded from LpManual.com Manuals

Note: If the computer enters the hibernation mode while it is docked to the docking station, do not undock it before resuming normal operation. If you do undock it and then try to resume normal operation, you will get an error message, and you will have to restart the system.

To cause the computer to enter hibernation mode, do any of the following:

- Press the Fn+F12 keys.
- If you have defined one of the following actions as the event that causes the system to go into hibernation mode, perform that action.
  - Closing the lid.
  - Pressing the power button.
  - Pressing Fn+F4 keys.

Also, the computer goes into hibernation mode automatically in either of the following conditions:

- If a “hibernation time” has been set on the timer, and if the user does not do any operation with the keyboard, the TrackPoint, the hard disk drive, the parallel connector, or the diskette drive within that time.
- If the timer conditions are satisfied in suspend mode.

When the power is turned on, the computer returns from hibernation mode and resumes operation. The hibernation file in the boot record on the hard disk drive is read, and system status is restored from the hard disk drive.

Symptom-to-FRU index

This section contains following information:

- “Numeric error codes” on page 51
- “Error messages” on page 55
- “Beep symptoms” on page 56
- “No-beep symptoms” on page 56
- “LCD-related symptoms” on page 56
- “Intermittent problems” on page 57
- “Undetermined problems” on page 57

The symptom-to-FRU index in this section lists symptoms and errors and their possible causes. The most likely cause is listed first, in boldface type.

Note: Do the FRU replacement or other actions in the sequence shown in the column headed “FRU or action, in sequence.” If replacing a FRU does not solve the problem, put the original part back in the computer. Do not replace a nondefective FRU.

This index can also help you determine, during regular servicing, what FRUs are likely to need to be replaced next.

A numeric error is displayed for each error detected in POST or system operation. In the displays, **n** can be any number.

If no numeric code is displayed, check the narrative descriptions of symptoms. If the symptom is not described there, go to “Intermittent problems” on page 57.

Note: For a device not supported by diagnostic codes in the ThinkPad Notebooks, see the manual for that device.

Downloaded from LpManual.com Manuals

Numeric error codes

Table 2. Numeric error codes

Symptom or error	FRU or action, in sequence
0175 Bad CRC1, stop POST task—The EEPROM checksum is not correct.	**System board.**
0176 System Security—The system has been tampered with.	1. **Run BIOS Setup Utility, and save the current setting by pressing F10.** 2. System board.
0177 Bad SVP data, stop POST task—The checksum of the supervisor password in the EEPROM is not correct.	**System board.**
0182 Bad CRC2. Enter BIOS Setup and load Setup defaults.—The checksum of the CRS2 setting in the EEPROM is not correct.	1. **Run BIOS Setup Utility. Press F9, and Enter to load the default setting. Then save the current setting by pressing F10.** 2. System board.
0185 Bad startup sequence settings. Enter BIOS Setup and load Setup defaults.	1. **Run BIOS Setup Utility. Press F9, and Enter to load the default setting. Then save the current setting by pressing F10.**
0187 EAIA data access error—The access to EEPROM is failed.	**System board.**
0188 Invalid RFID Serialization Information Area.	**System board.**
0189 Invalid RFID configuration information area—The EEPROM checksum is not correct.	**System board.**
0190 Critical low-battery error	1. **Charge the battery pack.** 2. Battery pack.
0191 System Security—Invalid Remote Change requested.	1. **Run BIOS Setup Utility, and then save current setting by pressing F10.** 2. System board.
0192 System Security— Embedded Security hardware tamper detected.	**System board.**
0193 RF antenna has been removed	**Enter the BIOS Setup Utility supervisor password.**
0194 The computer has been carried through a security gate	**Enter the supervisor password.**
0195 Security hardware tamper detected	1. **Enter BIOS Setup Utility by entering supervisor password, and select Password → Security Chip → Clear Security Chip → to clear this error.** 2. Security chip. 3. System board.
0196 Security hardware removed	1. **Enter BIOS Setup Utility by entering supervisor password, and select Password → Security Chip → Clear Security Chip to clear this error.** 2. Security chip. 3. System board.
0197 Invalid remote change requested.	**The remote configuration for the security chip has failed. Confirm the operation and try again.**

Downloaded from LpManual.com Manuals

Table 2. Numeric error codes (continued)

Symptom or error	FRU or action, in sequence
0199 System Security— Security password retry count exceeded.	1. **Run BIOS Setup Utility, and then save the current setting by pressing F10.** 2. System board.
01C8 Two or more modem devices are found. Remove all but one of them. Press <Esc> to continue.	1. **Remove either a Mini-PCI Card or a modem daughter card. Otherwise, press Esc to ignore the warning message.** 2. System board.
01C9 Two or more Ethernet devices are found. Remove all but one of them. Press <Esc> to continue.	1. **Remove either a Mini PCI Ethernet card or an Ethernet daughter card. Otherwise, press Esc to ignore the warning message.** 2. System board.
01C9 More than one Ethernet devices are found. Remove one of them. Press <Esc> to continue.	1. **Remove the Ethernet device that you installed; or press Esc to ignore the warning message.** 2. System board.
01CA More than one Wireless LAN devices are found. Remove one of them.	1. **Remove the wireless LAN device that you installed**. 2. System board.
0200 Hard disk error—The hard disk is not working.	1. **Reseat the hard disk drive.** 2. Load Setup Defaults in BIOS Setup Utility. 3. Hard disk drive. 4. System board.
021x Keyboard error.	**Run interactive tests of the keyboard and the auxiliary input device.**
0220 Monitor type error—Monitor type does not match the one specified in CMOS.	**Load Setup Defaults in BIOS Setup Utility.**
0230 Shadow RAM error—Shadow RAM fails at offset nnnn.	**System board.**
0231 System RAM error—System RAM fails at offset nnnn.	1. **DIMM.** 2. System board.
0232 Extended RAM error— Extended RAM fails at offset nnnn.	1. **DIMM.** 2. System board.
0250 System battery error—System battery is dead.	1. **Charge the backup battery for more than 8 hours by connecting the ac adapter.** 2. Replace the backup battery and run BIOS Setup Utility to reset the time and date.
0251 System CMOS checksum bad— Default configuration used.	1. **Charge the backup battery for more than 8 hours by connecting the ac adapter.** 2. Replace the backup battery and run BIOS Setup Utility to reset the time and date.
0252 Password checksum bad—The password is cleared.	**Reset the password by running BIOS Setup Utility.**
0260 System timer error.	1. **Charge the backup battery for more than 8 hours by connecting the ac adapter.** 2. Replace the backup battery and run BIOS Setup Utility to reset the time and date. 3. System board.

Downloaded from LpManual.com Manuals

Table 2. Numeric error codes (continued)

Symptom or error	FRU or action, in sequence
0270 Real-time clock error.	1. **Charge the backup battery for more than 8 hours by connecting the ac adapter.** 2. Replace the backup battery and run BIOS Setup Utility to reset the time and date. 3. System board.
0271 Date and time error—Neither the date nor the time is set in the computer.	**Run BIOS Setup Utility to reset the time and date.**
0280 Previous boot incomplete— Default configuration used.	1. **Load "Setup Default" in BIOS Setup Utility.** 2. DIMM. 3. System board.
02B2 Incorrect drive A type.	1. **Diskette drive.** 2. External FDD cable. 3. I/O card.
02D0 System cache error.	
02F0 CPU ID:xx Failed.	1. **CPU.** 2. System board.
02F4 EISA CMOS not writable.	1. **Load Setup Defaults in BIOS Setup Utility.** 2. Replace the backup battery. 3. System board.
02F5 DMA test failed.	1. **DIMM.** 2. System board.
02F6 Software NMI failed	1. **DIMM.** 2. System board.
02F7 Fail-safe timer NMI failed	1. **DIMM.** 2. System board.
1801 Attached docking station is not supported	**Shut down the computer and remove it from the docking station.**
1802 Unauthorized network card is plugged in—Turn off and remove the miniPCI network card.	1. **Remove Mini PCI network card.** 2. System board.
1803 Unauthorized daughter card is plugged in—Turn off and remove the daughter card.	1. **Remove the daughter card that you installed.** 2. System board.
1804 Unauthorized WAN card is plugged in—Power off and remove the WAN card.	1. **Remove the WAN card that you installed.** 2. System board.
1805 Unauthorized Wireless USB card is plugged in—Power off and remove the Wireless USB card.	1. **Remove the Wireless USB card that you installed.** 2. System board.

Downloaded from LpManual.com Manuals

Table 2. Numeric error codes (continued)

Symptom or error	FRU or action, in sequence
1810 Hard disk partition layout error.	1. **If the Access Predesktop Area has been previously disabled, then go to the BIOS Setup Utility by pressing F1 to open the BIOS Setup Utility. Select Security → Predesktop Area → Access Predesktop → Area. Set this item to Disabled. Save and exit.** 2. If the Access Predesktop Area has not been previously disabled, press Enter to load Access Predesktop Area. Then run **RECOVER TO FACTORY CONTENTS** in Access Predesktop Area. 3. If item 2 failed, press F3 in the Welcome screen in **RECOVER TO FACTORY CONTENTS**. Run FDISK, and then delete all partitions. Run **RECOVER TO FACTORY CONTENTS** in Access Predesktop Area again. 4. If item 3 failed, select CD-ROM boot in **Startup** in Access Predesktop Area. Boot from the Recovery CD and perform full recovery from it. 5. If item 4 failed, replace the hard disk drive.
1820 More than one external fingerprint reader is attached. Power off and remove all but the reader that you set up within your main operating system.	**Remove all but the reader that you set up for the authentication.**
1830 Invalid memory configuration—Power off and install a memory module to Slot-0 or the lower slot.	**Install DIMM in Slot-0, but not in Slot-1.** **Note:** For the construction of the DIMM slot, see “1030 DIMM” on page 74.
2000 Hard Drive Active Protection sensor diagnostics failed. Press <Esc> to continue. Press <F1> to enter SETUP	1. Undock docking station or port replicator if it is attached to the ThinkPad Notebook. 2. Place the ThinkPad Notebook on a horizontal surface. Do not apply any physical shock to the computer. 3. Run **Diagnostics → ThinkPad Devices → HDD Active Protection Test**.
2010 Warning: Your internal hard disk drive (HDD) may not function correctly on this system. Ensure that your HDD is supported on this system and that the latest HDD firmware is installed.	Inform the following information to the customer: If in the primary bay the customer is using a non-Lenovo hard disk drive (HDD), with the risk in mind, the customer can still use it by pressing ESC. If in the primary drive bay the customer is using a supported Lenovo HDD with an old firmware, the customer needs to update its firmware to the latest. The latest version is available at http://support.lenovo.com
201x The solid state drive you have installed has not passed qualification for use in this computer. Using this drive may cause compatibility issues and potential issues with data integrity, including data loss. Press <Esc> to continue.	Inform the following information to the customer: If the customer is using a non qualified SSD which is not supported by this system, with the risk in mind, the customer can still use it by pressing ESC. Location of the SSD is designated as below: 2010: HDD0 (in HDD slot-0) 2011: HDD1 (in HDD slot-1) 2012: Ultrabay with HDD adapter
2100 Initialization error on HDD0 (Main hard disk drive)	1. **Reseat the hard disk drive.** 2. Main hard disk drive. 3. System board.
2102 Initialization error on HDD1 (Ultrabay hard disk drive)	1. **Reseat the hard disk drive.** 2. Ultrabay™ hard disk drive. 3. System board.

Downloaded from LpManual.com Manuals

Table 2. Numeric error codes (continued)

Symptom or error	FRU or action, in sequence
2110 Read error on HDD0 (Main hard disk drive)	1. **Reseat the hard disk drive.** 2. Main hard disk drive. 3. System board.
2112 Read error on HDD1 (Ultrabay hard disk drive)	1. **Reseat the hard disk drive.** 2. Ultrabay hard disk drive. 3. System board.

Error messages

Table 3. Error messages

Symptom or error	FRU or action, in sequence
Device address conflict.	1. **Load "Setup Defaults" in the BIOS Setup Utility**. 2. Backup battery. 3. System board.
Allocation error for device.	1. **Load "Setup Defaults" in the BIOS Setup Utility**. 2. Backup battery. 3. System board.
Failing bits: nnnn.	1. **DIMM**. 2. System board.
Invalid system configuration data.	1. **DIMM**. 2. System board.
I/O device IRQ conflict.	1. **Load "Setup Defaults" in the BIOS Setup Utility**. 2. Backup battery. 3. System board.
Hibernation error.	1. **Restore the system configuration to what it was before the computer entered hibernation mode**. 2. If memory size has been changed, re-create the hibernation file.
Fan error.	1. **Fan**. 2. Thermal grease. 3. System board.
Thermal sensing error.	**System board**.
Cannot boot from any device.	**Check the status of device which you want to boot from.** Device not found. 1. The device you want to boot from. 2. System board. Device Error. 1. The device you want to boot from. 2. System board. No valid operating system. 1. Check that the operating system has no failure and is installed correctly. 2. Reinstall the operation system. Excluded from boot order. • Enter the BIOS Setup Utility and add the device in boot order.

Downloaded from LpManual.com Manuals

Beep symptoms

Table 4. Beep symptoms

Symptom or error	FRU or action, in sequence
One beep and a blank, unreadable, or flashing LCD.	1. **Reseat the LCD connector**. 2. LCD assembly. 3. External CRT. 4. System board.
One long and two short beeps, and a blank or unreadable LCD.	1. **System board**. 2. LCD assembly. 3. DIMM.
Two short beeps with error codes.	**POST error. See "Numeric error codes" on page 51.**
Two short beeps and a blank screen.	1. **System board**. 2. DIMM.
Two or more beeps, or a continuous beep. Operating system starts successfully.	If a mini-PCI Ethernet card is installed, confirm that **Alert On LAN 2** in BIOS Setup Utility is **disabled**.
Three short beeps, pause, three more short beeps, and one short beep.	1. **DIMM**. 2. System board
One short beep, pause, three short beeps, pause, three more short beeps, and one short beep.	
Only the cursor appears.	**Reinstall the operating system**.
Four cycles of four short beeps and a blank screen.	**System board** (security chip)
Five short beeps and a blank screen.	**System board**

No-beep symptoms

Table 5. No-beep symptoms

Symptom or error	FRU or action, in sequence
No beep, power-on indicator on, LCD blank, and no POST.	1. **Make sure that every connector is connected tightly and correctly**. 2. DIMM. 3. System board.
No beep, power-on indicator on, and LCD blank during POST.	1. **Reseat DIMM**. 2. System board.
The power-on password prompt appears.	A power-on password or a supervisor password is set. Type the password and press **Enter**.
The hard-disk password prompt appears.	A hard-disk password is set. Type the password and press **Enter**.

LCD-related symptoms

Important: The TFT LCD for the notebook computer contains many thin-film transistors (TFTs). The presence of a small number of dots that are missing, discolored, or always lighted is characteristic of TFT LCD technology, but excessive pixel problems can cause viewing concerns.

If the LCD you are servicing has two or less visible defective pixels, it should not be considered faulty. However, if the LCD has three or more visible defective pixels, it will be deemed as defective by Lenovo and it should be replaced.

Notes:

Downloaded from LpManual.com Manuals

- This policy applies to all ThinkPad Notebooks purchased on 1 January, 2008 or later.
- Lenovo will not provide replacement if the LCD is within specification as we cannot guarantee that any replacement LCD will have zero pixel defects.
- One pixel consists of R, G, B sub-pixels.

Table 6. LCD-related symptoms

Symptom or error	FRU or action, in sequence
No beep, power-on indicator on, and a blank LCD during POST.	**System board**.
• LCD backlight not working. • LCD too dark. • LCD brightness cannot be adjusted. • LCD contrast cannot be adjusted.	1. **Reseat the LCD connectors**. 2. LCD assembly. 3. System board.
• LCD screen unreadable. • Characters missing pixels. • Screen abnormal. • Wrong color displayed.	1. **See important note for "LCD-related symptoms."** 2. Reseat all LCD connectors. 3. LCD assembly. 4. System board.
Horizontal or vertical lines displayed on LCD.	**LCD assembly**.

Intermittent problems

Intermittent system hang problems can be due to a variety of causes that have nothing to do with a hardware defect, such as cosmic radiation, electrostatic discharge, or software errors. FRU replacement should be considered only when a problem recurs.

When analyzing an intermittent problem, do the following:
1. Run the diagnostic test for the system board in loop mode **at least 10 times**.
2. If no error is detected, do **not** replace any FRUs.
3. If any error is detected, replace the FRU shown by the FRU code. Rerun the test to verify that no more errors exist.

Undetermined problems

If the diagnostic tests did not identify the adapter or device that has failed, if wrong devices are installed, or if the system simply is not operating, follow these procedures to isolate the failing FRU (do not isolate FRUs that have no defects).

Verify that all attached devices are supported by the computer.

Verify that the power supply being used at the time of the failure is operating correctly. (See "Power system checkout" on page 41.)

1. Turn off the computer.
2. Visually check each FRU for damage. Replace any damaged FRU.
3. Remove or disconnect all of the following devices:
   a. Non-ThinkPad devices
   b. Devices attached to the docking station or the port replicator
   c. Printer, mouse, and other external devices
   d. Battery pack
   e. Hard disk drive
   f. External diskette drive or optical drive
   g. DIMM
   h. Optical disk or diskette in the internal drive

Downloaded from LpManual.com Manuals

i. PC Cards

4. Turn on the computer.
5. Determine whether the problem has been solved.
6. If the problem does not recur, reconnect the removed devices one at a time until you find the failing FRU.
7. If the problem remains, replace the following FRUs one at a time (do not replace a nondefective FRU):
   a. System board
   b. LCD assembly

Downloaded from LpManual.com Manuals

Chapter 5. Status indicators

This chapter presents the system status indicators that show the status of the computer.

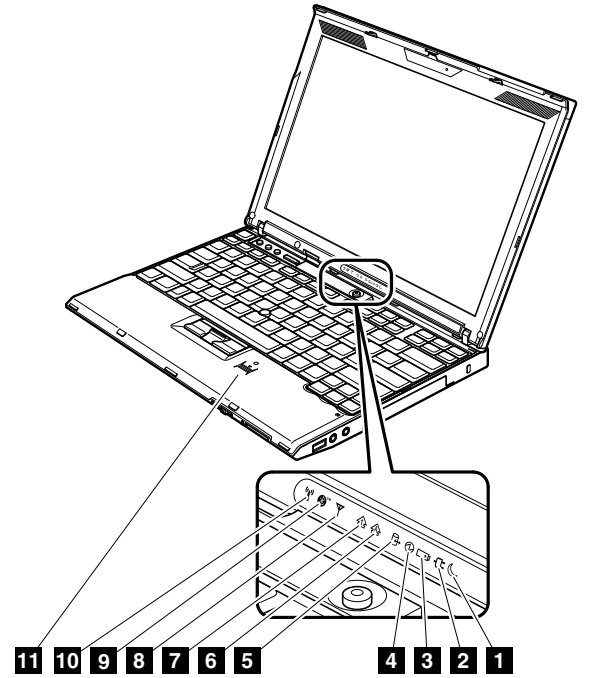

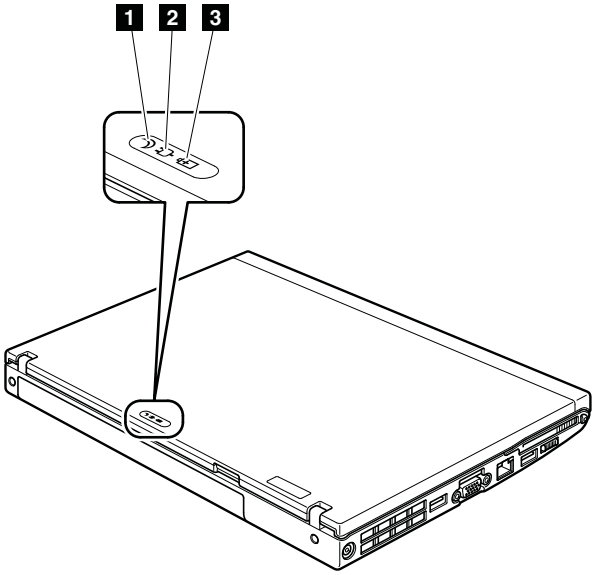

© Copyright Lenovo 2010, 2012

Downloaded from LpManual.com Manuals

Table 7. Status indicators

Indicator	Meaning	
1 Sleep (standby) status	Green:	The computer is in sleep (standby) mode.
	Blinking green:	The computer is entering sleep (standby) mode or hibernation mode, or is resuming normal operation.
2 AC power status	Green:	The computer is connected to the ac power supply.
3 Battery status	Green:	The battery is charged between 80% to 100% of the capacity, and being discharged between 0% to 80% of the capacity.
	Blinking green:	The battery is charged between 20% to 80% of the capacity, and being charged.
	Orange:	The battery is charged between 5% and 20% of the capacity, and being discharged.
	Blinking orange (slow):	The battery is charged between 5% to 20% of the capacity, and being charged.
	Blinking orange (rapid):	The battery is charged between 0% to 5% of the capacity.
4 Power on	Green:	The computer is on and ready to use. This indicator stays lit whenever the computer is on and is not in sleep (standby) mode.
5 Drive in use	Green:	Data is being read from or written to the hard disk drive, the diskette drive, or the drive in the Serial Ultrabay Slim device. When this indicator is on, do not put the computer into sleep (standby) mode or turn off the computer.
	Note: Do not move the system while the green drive-in-use light is on. Sudden physical shock could cause drive errors.	
6 Caps lock	Green:	Caps Lock mode is enabled. To enable or disable Caps Lock mode, press the Caps Lock key.
7 Num lock	Green:	The numeric keypad on the keyboard is enabled. To enable or disable the keypad, press and hold the Shift key, and press the NumLk (ScrLk) key.
8 Wireless WAN status	Green:	The wireless WAN is on, and the radio link is ready for use, or the data is being transmitted.
	Blinking green:	Data is being transmitted (for some models).

Downloaded from LpManual.com Manuals

Table 7. Status indicators (continued)

Indicator		Meaning	
9	Wireless PAN status or	Green:	Wireless PAN (Bluetooth wireless or Wireless USB) is operational. This indicator is on when Wireless PAN is on and not in suspend mode, or the data is being transmitted.
		Blinking green:	Data is being transmitted (for some models).
10	Wireless LAN status	Green:	The wireless LAN feature is on, and the radio link is ready for use, or the data is being transmitted.
		Blinking green:	Data is being transmitted (for some models).
11	Fingerprint reader status only for X201, X201i and X201s	Green:	The fingerprint reader is ready to swipe.
		Blinking green:	The fingerprint is being authenticated or has been authenticated.
		Blinking amber:	The fingerprint could not be authenticated.

Downloaded from LpManual.com Manuals

Downloaded from LpManual.com Manuals

Chapter 6. Fn key combinations

The following table shows the function of each combination of Fn with a function key.

Table 8. Fn key combinations

Key combination	Description
Fn+F1	Reserved.
Fn+F2	Lock the computer.
Fn+F3	Select a power plan (in Windows XP, power scheme) that has been created by Power Manager, or adjust the power level by using the slider control. When you press this combination, a panel for selecting a power plan (power scheme) appears. **Notes:** 1. To use the Fn+F3 key combination, you must have the ThinkPad PM device driver installed on the computer. 2. If you have logged on with an administrator user ID, and you press Fn+F3, the panel for selecting a power plan (power scheme) appears. If you have logged on with another user ID, and you press Fn+F3, the panel does not appear. 3. You cannot turn off the computer display by pressing Fn+F3.
Fn+F4	Put the computer in sleep (standby) mode. To return to normal operation, press the Fn key only, without pressing a function key. **Notes:** 1. To use the Fn+F4 key combination, you must have the ThinkPad PM device driver installed on the computer. 2. If you want to use the combination to put the computer into hibernation mode or do-nothing mode (in Windows XP, shut the computer down or show the panel for turning off the computer), change the settings in the Power Manager.
Fn+F5	Enable or disable the built-in wireless networking features and the Bluetooth features. If you press Fn+F5, a list of wireless features is displayed. You can quickly change the power state of each feature in the list. **Notes:** If you want to use Fn+F5 to enable the wireless feature, the following device drivers must be installed on the computer beforehand: • ThinkPad Power Management driver • OnScreen Display Utility • Wireless device drivers
Fn+F6	Change the camera and audio settings.
Fn+F7	Apply a presentation scheme directly, with no need to start Presentation Director. To disable this function and use the Fn+F7 key combination for switching a display output location, start Presentation Director, and change the settings. **Note:** If the computer is a Windows 7 model, it does not support presentation schemes, but the Fn+F7 combination is available for switching a display output location.
	For Windows 7: Switch a display output location • Computer display only (LCD) • Computer display and external monitor (same image) • Computer display and external monitor (extended desktop) • External monitor only **Note:** To switch between the computer display and an external monitor, the Win+P key combination is also available.

© Copyright Lenovo 2010, 2012

Downloaded from LpManual.com Manuals

Table 8. Fn key combinations (continued)

Key combination	Description
	For Windows Vista and Windows XP: Switch a display output location • External monitor • Computer display (LCD) and external monitor • Computer display (LCD) **Notes:** 1. This function is not supported if different desktop images are displayed on the computer display and the external monitor (the Extend desktop function). 2. This function does not work while a DVD movie or a video clip is playing. To enable this function, start Presentation Director, and change the Fn+F7 settings. **Note:** Multiple users can log on to a single operating system by using different user IDs. Each user needs to change the settings.
Fn+F8	Change the settings of the input device.
Fn+F9	Open the ThinkPad EasyEject Utility screen. Buttons for the following choices are displayed: • **Eject ThinkPad PC from UltraBase**: This button is displayed only if the ThinkPad computer has been attached to a ThinkPad X200 UltraBase. The computer can be detached from the ThinkPad X200 UltraBase. • **Run EasyEject Actions**: This button is used to select, stop, or remove external devices connected to the ThinkPad computer. • **Configure EasyEject Actions**: Opens the ThinkPad EasyEject Utility main window. • **Fn+F9 Settings**: Configures the settings for the Fn+F9 function. **Note:** If the computer is a Windows 7 model, it does not support the EasyEject Utility function.
Fn+F10	Reserved.
Fn+F11	Reserved.
Fn+F12	Put the computer into hibernation mode. To return to normal operation, press the power button for less than four seconds. **Note:** To use Fn+F12 for hibernation, you must have the ThinkPad PM device driver installed on the computer.
Fn+PgUp	Turn the ThinkLight® on or off. **Note:** This function is supported only on the ThinkPad computers that have the ThinkLight. The on or off status of the ThinkLight is shown on the screen for a few seconds when you press Fn+PgUp.
Fn+Home	The computer display becomes brighter.
Fn+End	The computer display becomes dimmer.
Fn+Spacebar	Enable the FullScreen Magnifier function.
Fn+PrtSc	Has the same function as the SysRq key.
Fn+ScrLk	Enable or disable the numeric keypad.
Fn+Pause	Has the same function as the Break key.
Fn+cursor keys	These key combinations work with Windows Media Player. Fn+down arrow key works for the Play or Pause button, Fn+up arrow key for the Stop button, Fn+right arrow key for the Next Track button, and Fn+left arrow key for the Previous Track button.

Downloaded from LpManual.com Manuals

Chapter 7. FRU replacement notices

This chapter presents notices related to removing and replacing parts. Read this chapter carefully before replacing any FRU.

External CRU statement to customers:
Some problems with your product can be resolved with a replacement part you can install yourself, called a “Customer Replaceable Unit” or “CRU.” Some CRUs are designated as Self-service CRUs and others are designated as Optional-service CRUs. *Installation of Self-service CRUs is your responsibility; you may request that Lenovo installs an Optional-service CRU according to the warranty service for your product.* Where you are installing the CRU, Lenovo will ship the CRU to you. CRU information and replacement instructions are shipped with your product and are available from Lenovo at any time upon request. You may find a list of CRUs in the publications that ship with your product or at http://www.lenovo.com/CRUs. You may be required to return the defective part that is replaced by the CRU. When return is required: (1) return instructions, a prepaid shipping label, and a container will be included with the replacement CRU; and (2) you may be charged for the replacement CRU if Lenovo does not receive the defective part within thirty (30) days of your receipt of the replacement CRU. See your Lenovo Limited Warranty documentation for full details.

Screw notices

Loose screws can cause a reliability problem. In the ThinkPad Notebook, this problem is addressed with special nylon-coated screws that have the following characteristics:

- They maintain tight connections.
- They do not easily come loose, even with shock or vibration.
- They are harder to tighten.
- Each one should be used only once.

Do the following when you service this machine:

- Keep the screw kit in your tool bag. For the part number of the screw kit, see “Miscellaneous parts” on page 247.
- It is recommended to use new screws.
- It is recommended to use each screw only once.
- Use a torque screwdriver if you have one.

Tighten screws as follows:

- **Plastic to plastic**
  Turn an additional **90 degrees** after the screw head touches the surface of the plastic part:

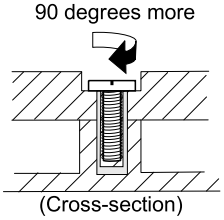

- **Logic card to plastic**
  Turn an additional **180 degrees** after the screw head touches the surface of the logic card:

© Copyright Lenovo 2010, 2012

Downloaded from LpManual.com Manuals

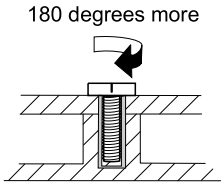

- **Torque driver**
  If you have a torque driver, refer to the **Torque** column in the screw information table for each step.
- Make sure that you use the correct screw. It is recommended to use new screws for replacements.
- If you have a torque screwdriver, tighten all screws firmly to the torque specified in the screw information table for each step.
- Ensure torque screw drivers are calibrated correctly following country specifications.

Retaining serial numbers

This section includes the following descriptions:

- "Restoring the serial number of the system unit" on page 66
- "Retaining the UUID" on page 67
- "Reading or writing the ECA information" on page 67

Restoring the serial number of the system unit

When the computer was manufactured, the EEPROM on the system board was loaded with the serial numbers of the system and all major components. These numbers need to remain the same throughout the life of the computer.

If you replace the system board, you must restore the serial number of the system unit to its original value.

Before replacing the system board, save the original serial number by doing the following:

1. Install the ThinkPad Hardware Maintenance Diskette Version 1.73 or later, and restart the computer.
2. From the main menu, select **1. Set System Identification**.
3. Select **2. Read S/N data from EEPROM**.

The serial number of each device in your computer is displayed; the serial number of the system unit is listed as follows:

- 20: Serial number

Write down that number.

Note: The serial number of the system unit is also written on the label attached to the bottom of the computer.

After you have replaced the system board, restore the serial number by doing the following:

1. Install the ThinkPad Hardware Maintenance Diskette Version 1.73 or later and restart the computer.
2. From the main menu, select **1. Set System Identification**.
3. Select **1. Add S/N data from EEPROM**. Follow the instructions on the screen.

If the MTM and Product ID numbers differ from each other on the rear label, use what is shown for the Product ID field. See example below:

Downloaded from LpManual.com Manuals

MTM on rear label:	TTTT-CTO S/N SSSSSSS
Product ID on rear label:	TTTT-MMM (Use this number when setting Serial Number)

In the example, the Serial Number to be input is '1STTTTMMMSSSSSSS'.

Retaining the UUID

The Universally Unique Identifier (UUID) is a 128-bit number uniquely assigned to your computer at production and stored in the EEPROM of your system board. The algorithm that generates the number is designed to provide unique IDs until the year A.D. 3400. No two computers in the world have the same number.

When you replace the system board, you must set the UUID on the new system board as follows:

1. Install the ThinkPad Hardware Maintenance Diskette Version 1.73 or later, and restart the computer.
2. From the main menu, select **4. Assign UUID**. A new UUID is created and written. If a valid UUID already exists, it is not overwritten.

Reading or writing the ECA information

Information on Engineering Change Announcements (ECA) are stored in the EEPROM of the system board. The electronic storage of this information simplifies the procedure to check if the ECA has been previously applied to a machine. The machine does not need to be disassembled to check for the ECA application.

To check what ECAs have been previously applied to the machine, use the ECA Information Read/Write function on the ThinkPad Hardware Maintenance Diskette Version 1.73 or later.

1. Insert the ThinkPad Hardware Maintenance Diskette Version 1.73 or later, and restart the computer.
2. From the main menu, select **6. Set ECA Information**.
3. To read ECA information, select **2. Read ECA/rework number from EEPROM** and follow the instruction.
4. To read box build date, select **5. Read box build date from EEPROM**, and follow the instruction on the screen.

After an ECA has been applied to the machine, the EEPROM must be updated to reflect the ECA's application. Use the ThinkPad Hardware Maintenance Diskette Version 1.73 or later to update the EEPROM.

Note: Only the ECA number is stored in the EEPROM. The machine type of the ECA is assumed be the same as the machine type of the machine that had the ECA applied to it.

1. Insert the ThinkPad Hardware Maintenance Diskette Version 1.73 or later, and restart the computer.
2. From the main menu, select **6. Set ECA Information**.
3. To write ECA information, select **1. Write ECA/rework number from EEPROM**, and follow the instruction.
4. To write box build date, select **4. Write box build date from EEPROM**, and follow the instruction on the screen.

If the system board is being replaced, try to read the ECA information from the old system board and transfer the information to the new system. If the system board is inoperable, this will not be possible.

Downloaded from LpManual.com Manuals

Downloaded from LpManual.com Manuals

Chapter 8. Removing and replacing a FRU

This chapter presents directions and drawings for use in removing and replacing a FRU. Be sure to observe the following general rules:

1. Do not try to service any computer unless you have been trained and certified. An untrained person runs the risk of damaging parts.
2. Before replacing any FRU, review Chapter 7 “FRU replacement notices” on page 65.
3. Begin by removing any FRUs that have to be removed before the failing FRU. Any such FRUs are listed at the top of the page. Remove them in the order in which they are listed.
4. Follow the correct sequence in the steps for removing the FRU, as given in the drawings by the numbers in square callouts.
5. When turning a screw to replace a FRU, turn it in the direction as given by the arrow in the drawing.
6. When removing the FRU, move it in the direction as given by the arrow in the drawing.
7. To put the new FRU in place, reverse the removal procedure and follow any notes that pertain to replacement. For information about connecting and arranging internal cables, see Chapter 9 “Locations” on page 131.
8. When replacing a FRU, use the correct screw as shown in the procedures.

DANGER

Before removing any FRU, turn off the computer, unplug all power cords from electrical outlets, remove the battery pack, and then disconnect any interconnecting cables.

Attention: After replacing a FRU, do not turn on the computer until you have made sure that all screws, springs, and other small parts are in place and none are loose inside the computer. Verify this by shaking the computer gently and listening for rattling sounds. Metallic parts or metal flakes can cause electrical short circuits.

Attention: The system board is sensitive to, and can be damaged by, electrostatic discharge. Before touching it, establish personal grounding by touching a ground point with one hand or by using an electrostatic discharge (ESD) strap (P/N 6405959).

External CRU statement to customers:
Some problems with your product can be resolved with a replacement part you can install yourself, called a “Customer Replaceable Unit” or “CRU.” Some CRUs are designated as Self-service CRUs and others are designated as Optional-service CRUs. *Installation of Self-service CRUs is your responsibility; you may request that Lenovo installs an Optional-service CRU according to the warranty service for your product.* Where you are installing the CRU, Lenovo will ship the CRU to you. CRU information and replacement instructions are shipped with your product and are available from Lenovo at any time upon request. You may find a list of CRUs in the publications that ship with your product or at http://www.lenovo.com/CRUs. You may be required to return the defective part that is replaced by the CRU. When return is required: (1) return instructions, a prepaid shipping label, and a container will be included with the replacement CRU; and (2) you may be charged for the replacement CRU if Lenovo does not receive the defective part within thirty (30) days of your receipt of the replacement CRU. See your Lenovo Limited Warranty documentation for full details.

© Copyright Lenovo 2010, 2012

Downloaded from LpManual.com Manuals

Before servicing ThinkPad X200, X200s, X200si, X201, X201i, and X201s

Removing the SIM card:

Some models of the ThinkPad X200, X200s, X200si, X201, X201i, and X201s you are servicing might have the SIM card that the customer has been installed.

If the computer you are servicing has the SIM card, remove it before you start the servicing.

To remove the SIM card, you need to remove the battery pack first. (See “1010 Battery pack” on page 71.)

After you finish the servicing, make sure that you insert the card back into the slot firmly.

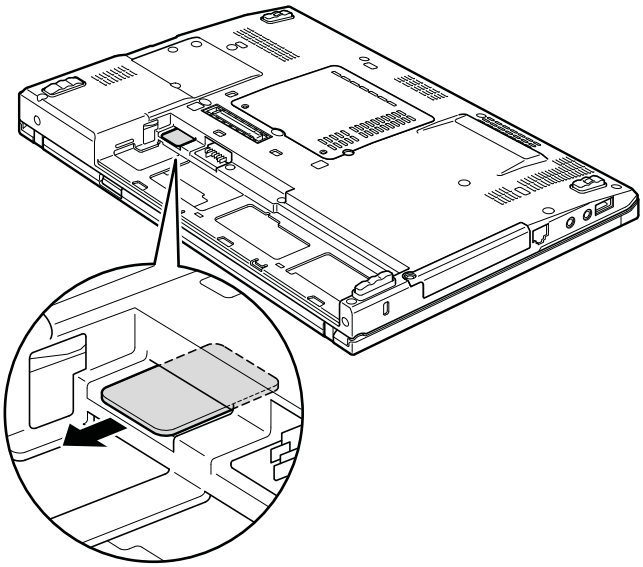

Notice on disconnecting the cable from flip-lock ZIF connector:

Some cables used in the ThinkPad X200, X200s, X200si, X201, X201i, and X201s are connected to the flip-lock ZIF connectors.

When disconnecting the cable from those connectors, do as shown in this figure.

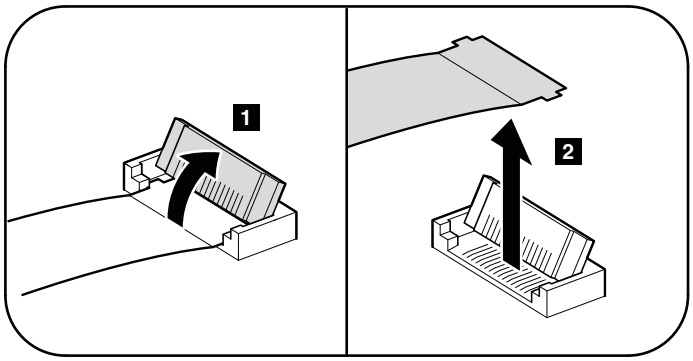

Downloaded from LpManual.com Manuals

1010 Battery pack

Important notice for replacing a battery pack:
The Lenovo ThinkVantage Toolbox (in Windows 7), Lenovo System Toolbox (in Windows Vista and Windows XP), and Lenovo Solution Center (in Windows 7) have an automatic battery diagnostic that determines if the battery pack is defective. A battery pack FRU should not be replaced unless this diagnostic shows that the battery is defective.

The only exception to this is if the battery pack is physically damaged or a customer is reporting a possible safety issue.

If ThinkVantage Toolbox or Lenovo System Toolbox is not installed in the computer, the customer should download this program before a non-physically damaged battery pack is replaced. Note that a physically damaged battery pack is non-warranty replacement.

Table 9. Removal steps of battery pack

DANGER

Use only the battery specified in the parts list for your computer. Any other battery could ignite or explode.

Unlock the battery release lever 1. Holding the battery release lever in the unlocked position 2, remove the battery pack in the direction shown by arrow 3.

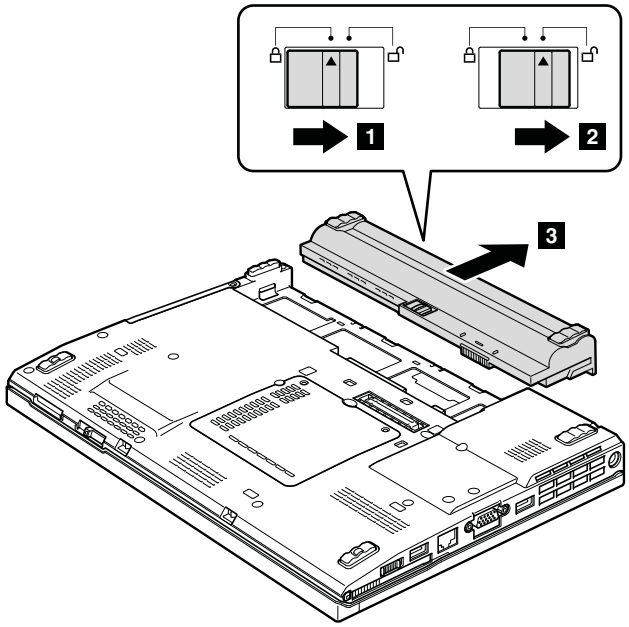

When installing:

Install the battery pack along the slide rails of the slot. Then make sure that the battery release lever is in the locked position.

1020 Hard disk drive (HDD) cover, HDD, and HDD rubber rails or solid state drive (SSD) and storage converter

For access, remove this FRU:
- “1010 Battery pack” on page 71

Downloaded from LpManual.com Manuals

Attention:

- Do not drop the hard disk drive or apply any physical shock to it. The hard disk drive is sensitive to physical shock. Improper handling can cause damage and permanent loss of data.
- Before removing the drive, have the user make a backup copy of all the information on it if possible.
- Never remove the drive while the system is operating or is in suspend mode.

Table 10. Removal steps of HDD cover, HDD, and HDD drive rubber rails or SSD and storage converter

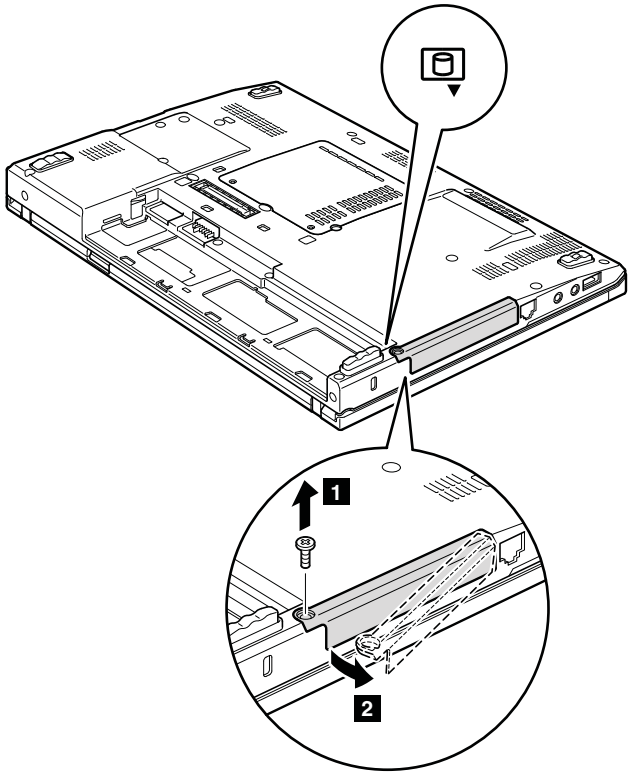

Step	Screw (quantity)	Color	Torque
1	Hard disk drive screw, M3 × 3 mm, wafer-head, nylon-coated (1)	Black	0.392 Nm (4 kgf-cm)

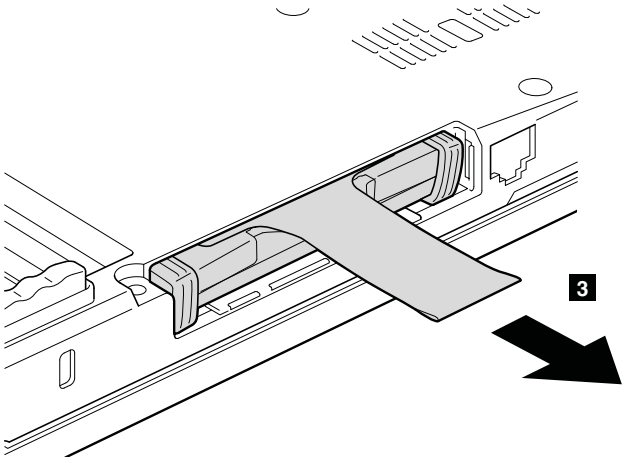

Downloaded from LpManual.com Manuals

Table 10. Removal steps of HDD cover, HDD, and HDD drive rubber rails or SSD and storage converter (continued)

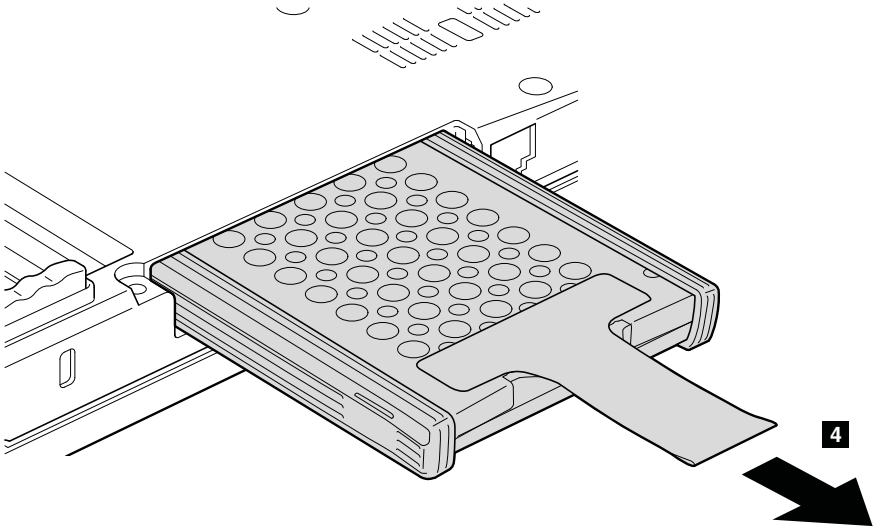

When installing:

Make sure that the HDD connector or SSD connector is attached firmly.

HDD and HDD rubber rails:

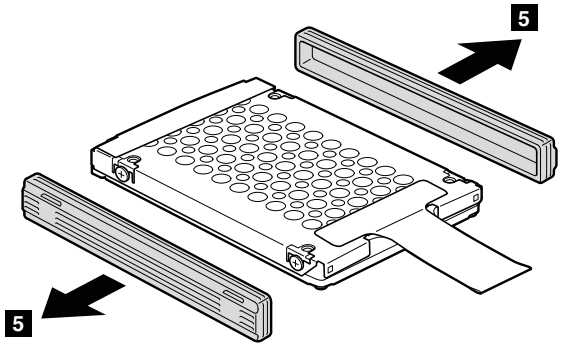

When installing:

The rubber rails on the hard disk drive must be attached to the replacement drive. Otherwise the drive cannot be installed properly.

Downloaded from LpManual.com Manuals

Table 10. Removal steps of HDD cover, HDD, and HDD drive rubber rails or SSD and storage converter (continued)

SSD and storage converter:

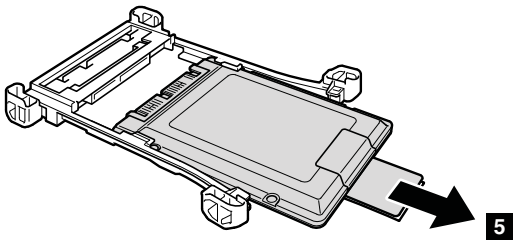

When installing:

When you install the SSD in the storage converter, do as follows.

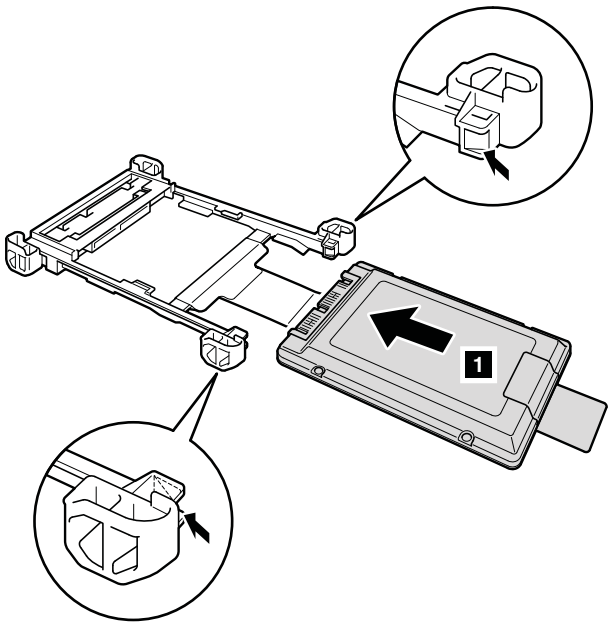

1030 DIMM

For access, remove this FRU in order:

- “1010 Battery pack” on page 71

Downloaded from LpManual.com Manuals

Table 11. Removal steps of dimm

Remove the DIMM slot cover as shown in this figure.

Note: Loosen the screws **1**, but do not remove them.

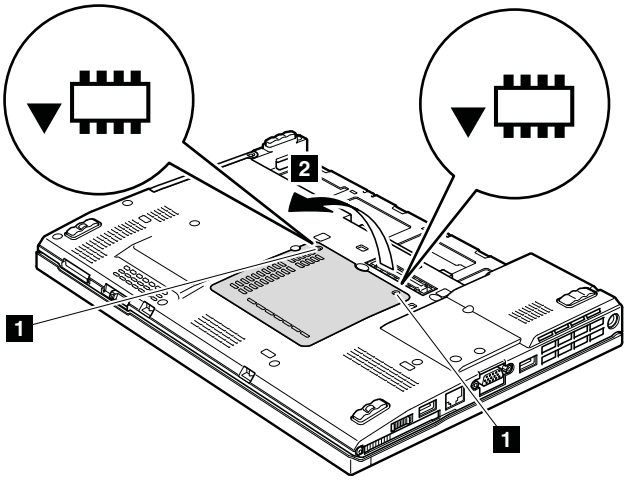

Note: For ThinkPad X200, X200s, and X200si, if only one DIMM is used on the computer you are servicing, the card must be installed in SLOT-0 (**a**), but not in SLOT-1 (**b**).

For ThinkPad X200, X200s, and X200si:

Downloaded from LpManual.com Manuals

Table 11. Removal steps of dimm (continued)

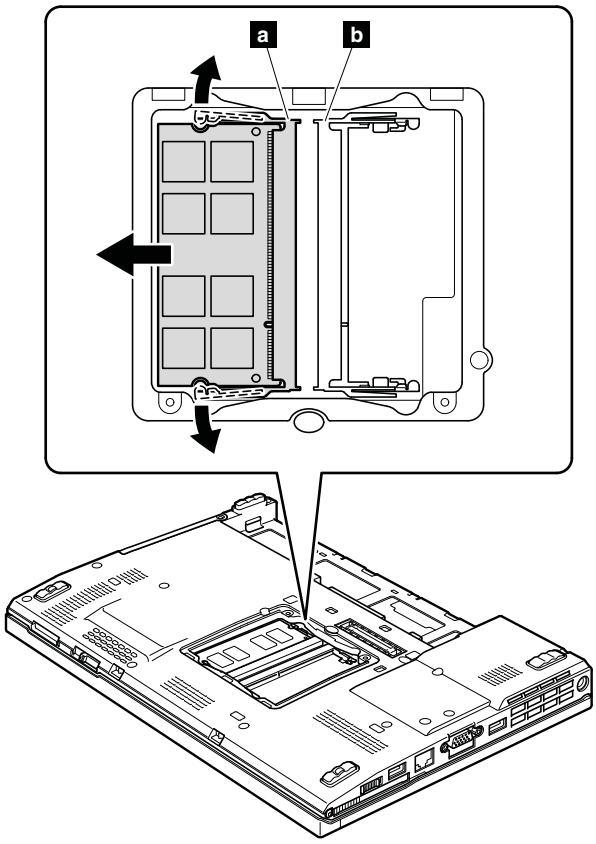

For ThinkPad X201, X201i, and X201s:

Downloaded from LpManual.com Manuals

Table 11. Removal steps of dimm (continued)

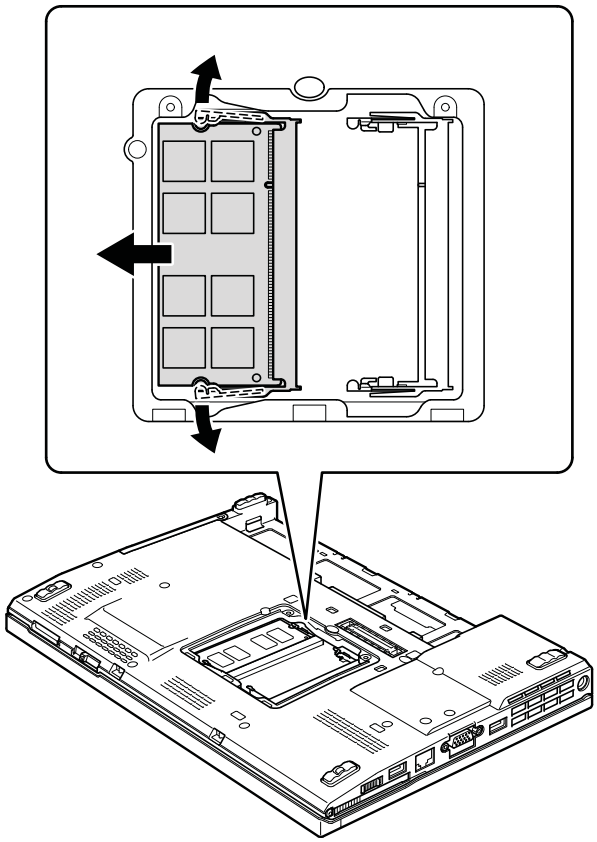

When installing:

Insert the notched end of the DIMM into the socket. Press the DIMM firmly, and pivot it until it snaps into the place. Make sure that it is firmly fixed in the slot and does not move easily.

1040 Keyboard

For access, remove this FRU in order:

- “1010 Battery pack” on page 71

Downloaded from LpManual.com Manuals

Table 12. Removal steps of keyboard

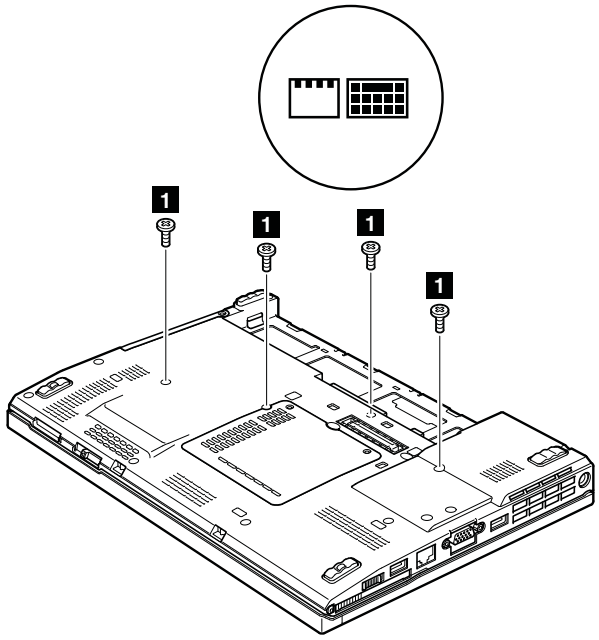

Step	Icon	Screw (quantity)	Color	Torque
1		M2 × 5 mm, wafer-head, nylon-coated (4)	Black	0.181 Nm (1.85 kgf-cm)

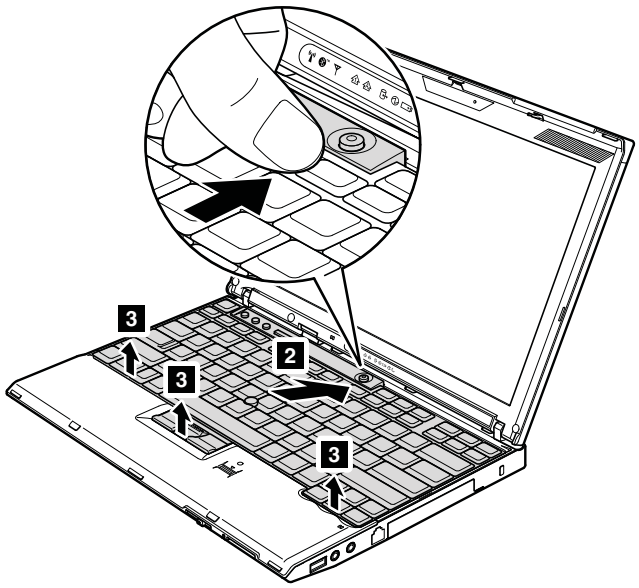

Downloaded from LpManual.com Manuals

Table 12. Removal steps of keyboard (continued)

Lift the keyboard a little in the direction shown by arrow **4**, and then detach the connector **5**.

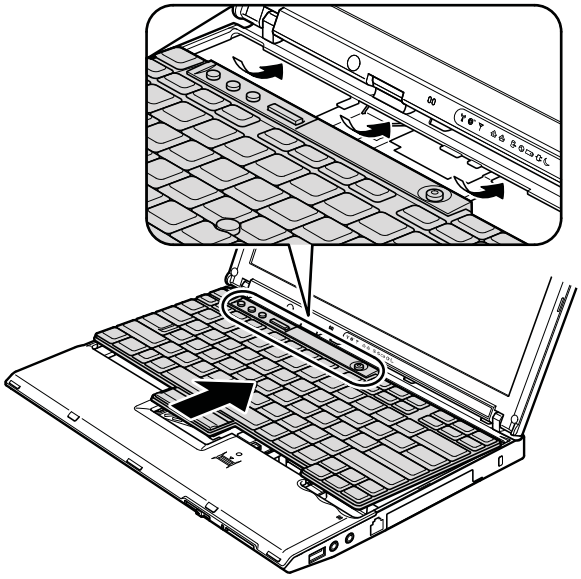

When installing:

1. Attach the keyboard connector firmly.

2. Make sure that the keyboard edges are under the frame as shown in this figure. Then press the keys to latch the keyboard firmly in place.

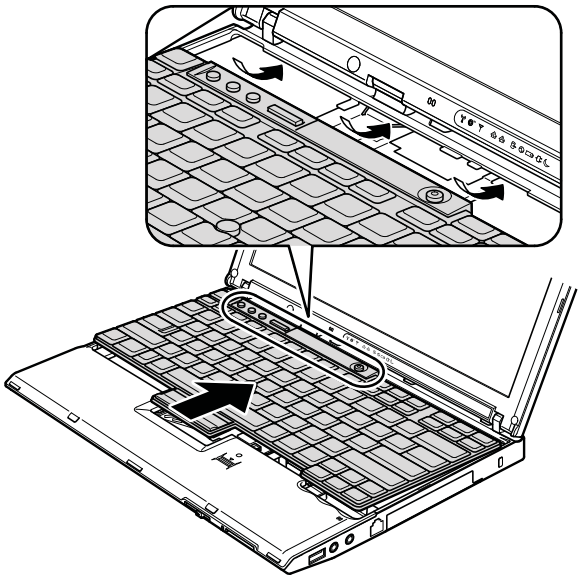

3. To make sure that the front side of the keyboard is housed firmly, gently press the keys with your thumbs and try to slide the keyboard toward you.

Downloaded from LpManual.com Manuals

Table 12. Removal steps of keyboard (continued)

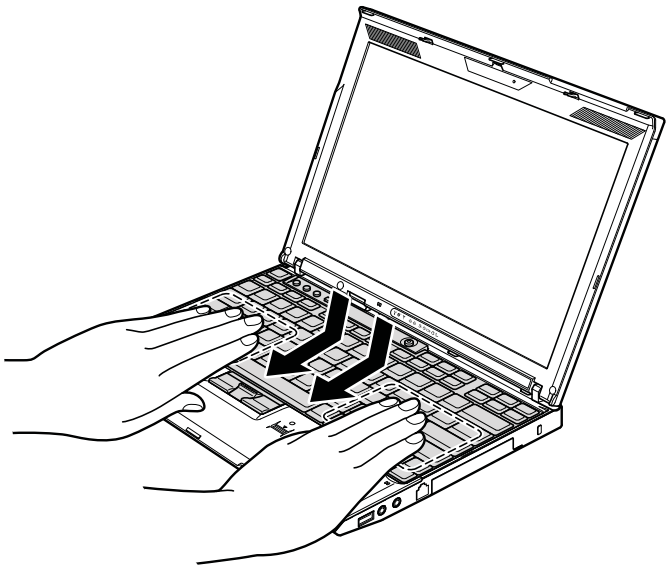

4. Secure the keyboard by tightening the screws from the bottom side of the computer.

1050 Palm rest or palm rest with fingerprint reader

For access, remove this FRU in order:
- “1010 Battery pack” on page 71
- “1040 Keyboard” on page 77

Note: In models with the fingerprint reader, the sensor is attached to the palm rest FRU. If the fingerprint reader has any defects, you can replace it by the procedures given in this section, which are the same for a palm rest with or without a fingerprint reader.

Table 13. Removal steps of palm rest

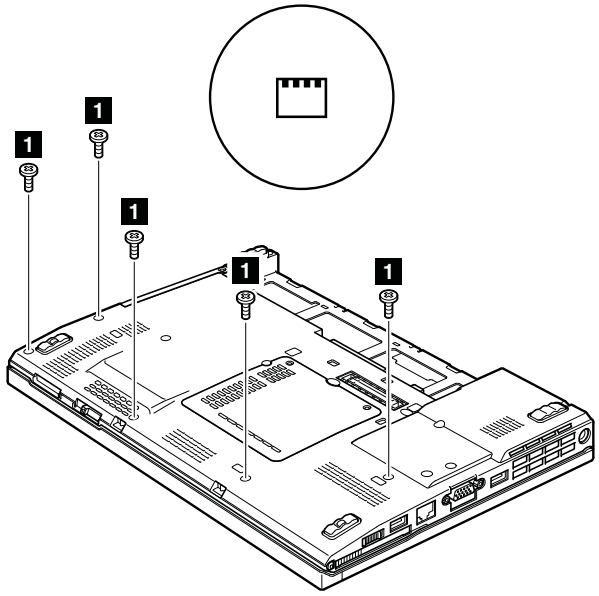

Downloaded from LpManual.com Manuals

Table 13. Removal steps of palm rest (continued)

Step	Icon	Screw (quantity)	Color	Torque
1		M2 × 5 mm, wafer-head, nylon-coated (5)	Black	0.181 Nm (1.85 kgf-cm)

Note: Step 2 is only for models with the fingerprint reader. For models without the fingerprint reader, skip step 2.

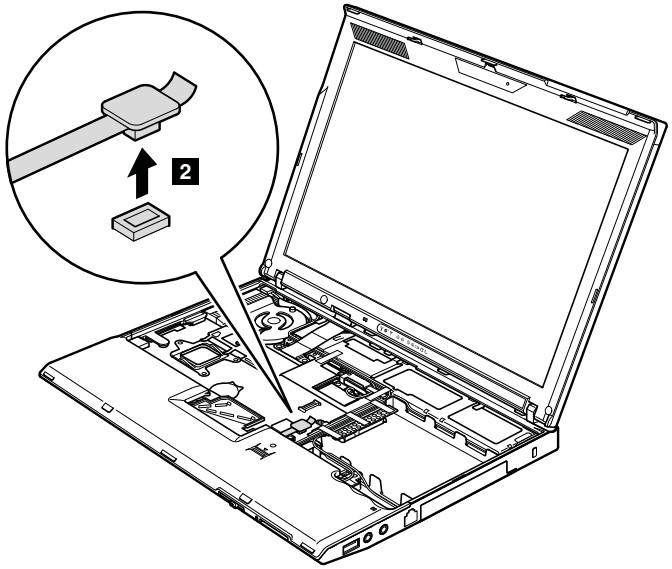

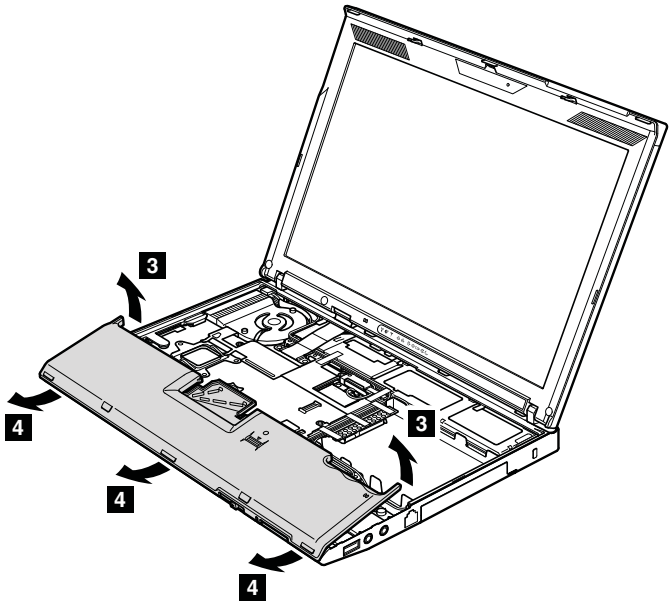

Downloaded from LpManual.com Manuals

Table 13. Removal steps of palm rest (continued)

When installing:

1. In models with the fingerprint reader, attach the fingerprint reader connector firmly to the system board.
2. Press the left and right top edges of the palm rest to fit it into place.
3. Push the front side of the palm rest until it clicks into place.

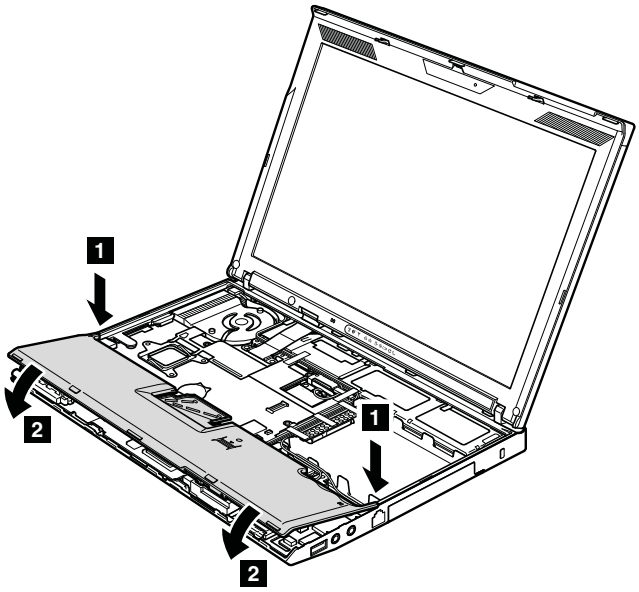

4. Close the LCD cover and turn the computer over. Then fasten the five screws to secure the palm rest.

1060 Backup battery

DANGER

Use only the battery specified in the parts list for your computer. Any other battery could ignite or explode.

For access, remove these FRUs in order:

- “1010 Battery pack” on page 71
- “1040 Keyboard” on page 77
- “1050 Palm rest or palm rest with fingerprint reader” on page 80

Downloaded from LpManual.com Manuals

Table 14. Removal steps of backup battery

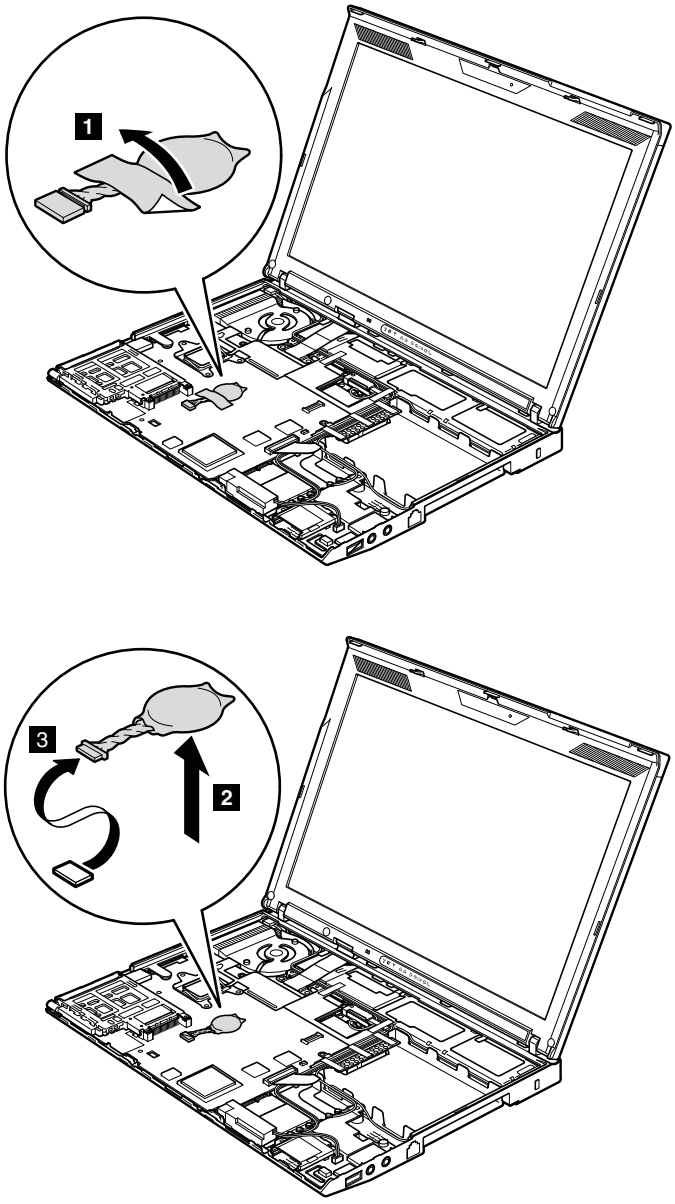

When installing:

Make sure that the battery connector is attached firmly.

1070 PCI Express Mini Card for wireless LAN/WiMAX

For access, remove these FRUs in order:

- “1010 Battery pack” on page 71
- “1040 Keyboard” on page 77
- “1050 Palm rest or palm rest with fingerprint reader” on page 80

Downloaded from LpManual.com Manuals

Table 15. Removal steps of PCI Express Mini Card for wireless LAN/WiMAX

Full size PCI Express Mini Card:

In step 1, unplug the jacks by using the removal tool antenna RF connector (P/N: 08K7159) or pick the connectors with your fingers and gently unplug them in direction of the arrow.

Note: Some models might have two antenna cables in step 1.

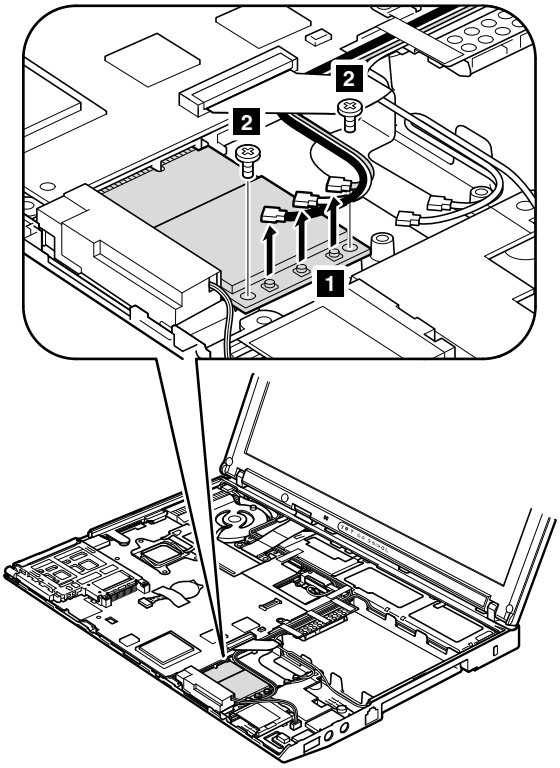

Step	Screw (quantity)	Color	Torque
2	M2 × 3 mm, wafer-head, nylon-coated (2)	Black	0.181 Nm (1.85 kgf-cm)

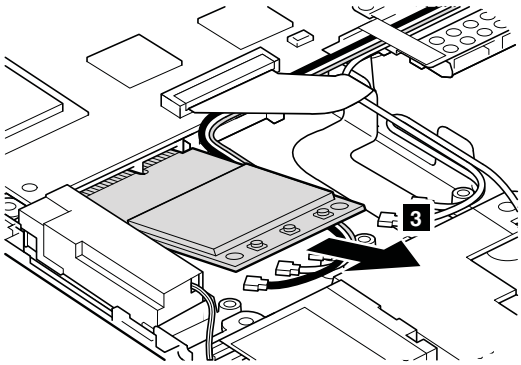

Downloaded from LpManual.com Manuals

Table 15. Removal steps of PCI Express Mini Card for wireless LAN/WiMAX (continued)

When installing:

- In models with wireless LAN card that has two antenna connectors, plug the gray cable into the jack labeled **MAIN** or **M** on the card, and the black cable into the jack labeled **AUX** or **A**. If the computer you are servicing has three cables, put the white cable in the cable protection tube.
- In models with wireless LAN card that has three antenna connector, plug the gray cable (MAIN) into the jack labeled **TR1**, the white cable (3rd) into jack labeled **RO** or **TR3**, and the black cable (AUX) into jack labeled **TR2** on the card.

Harf size PCI Express Mini Card:

In step **1**, unplug the jacks by using the removal tool antenna RF connector (P/N: 08K7159) or pick the connectors with your fingers and gently unplug them in direction of the arrow.

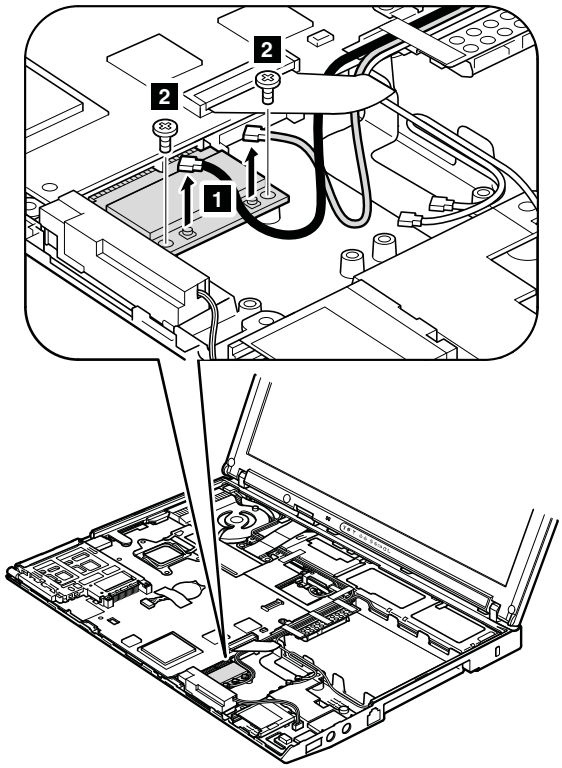

Step	Screw (quantity)	Color	Torque
2	M2 × 3 mm, wafer-head, nylon-coated (2)	Black	0.181 Nm (1.85 kgf-cm)

Downloaded from LpManual.com Manuals

Table 15. Removal steps of PCI Express Mini Card for wireless LAN/WiMAX (continued)

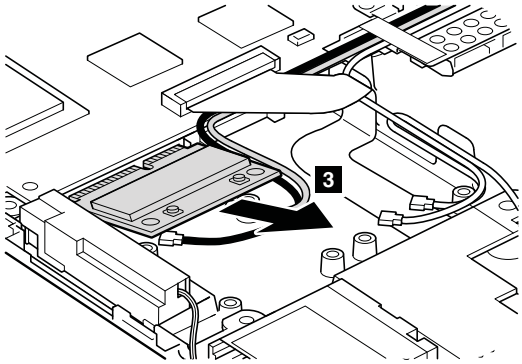

When installing:

Plug the gray cable into the jack labeled **MAIN** on the card, and the black cable into the jack labeled **AUX**.

1080 PCI Express Mini Card for wireless WAN

For access, remove these FRUs in order:
- "1010 Battery pack" on page 71
- "1040 Keyboard" on page 77
- "1050 Palm rest or palm rest with fingerprint reader" on page 80

Table 16. Removal steps of PCI Express Mini Card for wireless WAN

In step **1**, unplug the jacks by using the removal tool antenna RF connector (P/N: 08K7159) or pick the connectors with your fingers and gently unplug them in direction of the arrow.

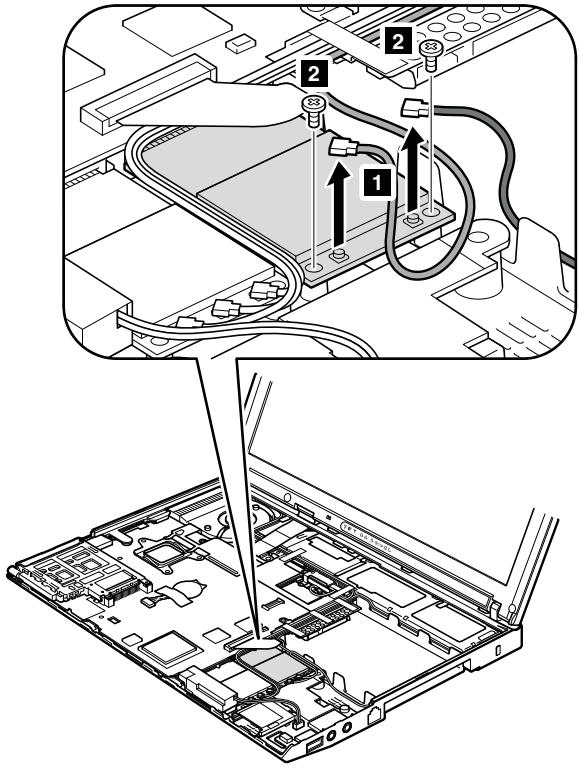

Downloaded from LpManual.com Manuals

Table 16. Removal steps of PCI Express Mini Card for wireless WAN (continued)

Step	Screw (quantity)	Color	Torque
3	M2 × 3 mm, wafer-head, nylon-coated (2)	Black	0.181 Nm (1.85 kgf-cm)

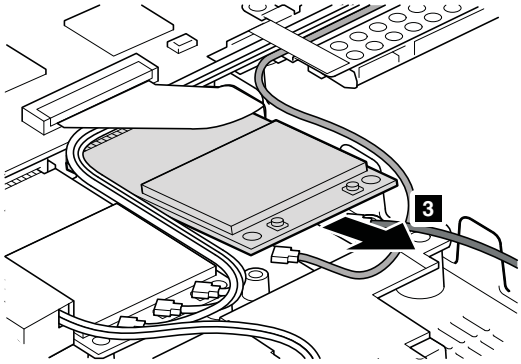

When installing:

Plug the red cable into the jack labeled **MAIN** on the card, and the blue cable into the jack labeled **AUX**.

1090 Intel Turbo Memory Minicard or Wireless USB PCI Express Half-Mini Card

For access, remove these FRUs in order:
- "1010 Battery pack" on page 71
- "1040 Keyboard" on page 77
- "1050 Palm rest or palm rest with fingerprint reader" on page 80

Table 17. Removal steps of Intel Turbo Memory Minicard or Wireless USB PCI Express Half-Mini Card

Note: Step 1 is only for models with the Wireless USB PCI Express Half-Mini Card. For models with the Intel® Turbo Memory Minicard, skip step 1.

In step 1, unplug the jacks by using the removal tool antenna RF connector (P/N: 08K7159) or pick the connectors with your fingers and gently unplug them in direction of the arrow.

Downloaded from LpManual.com Manuals

Table 17. Removal steps of Intel Turbo Memory Minicard or Wireless USB PCI Express Half-Mini Card (continued)

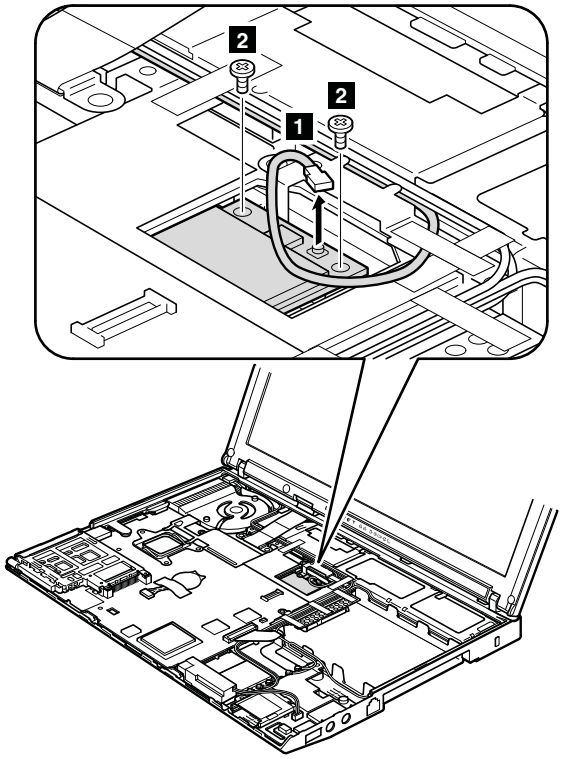

Step	Screw (quantity)	Color	Torque
2	M2 × 3 mm, wafer-head, nylon-coated (2)	Black	0.181 Nm (1.85 kgf-cm)

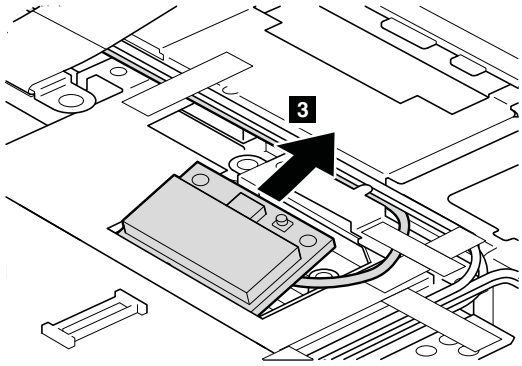

When installing:

In models with the Wireless USB PCI Express Half-Mini Card, plug the yellow cable into the jack on the card.

1100 Keyboard bezel

For access, remove these FRUs in order:

- “1010 Battery pack” on page 71

Downloaded from LpManual.com Manuals

- “1040 Keyboard” on page 77
- “1050 Palm rest or palm rest with fingerprint reader” on page 80

Table 18. Removal steps of keyboard bezel

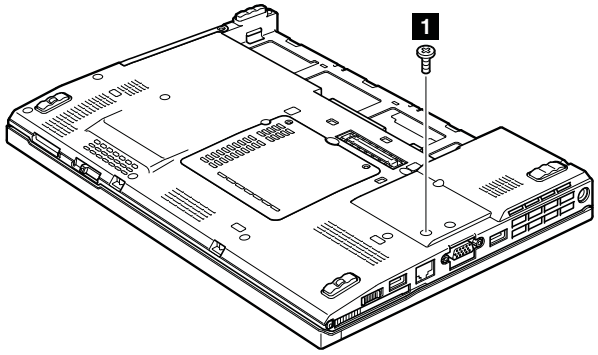

Step	Screw (quantity)	Color	Torque
1	M2 × 5 mm, wafer-head, nylon-coated (1)	Black	0.181 Nm (1.85 kgf-cm)

In step 2, detach the claws. Then remove the keyboard bezel in the direction shown by arrow 3.

Attention: When you service the keyboard bezel, avoid any kind of rough handling.

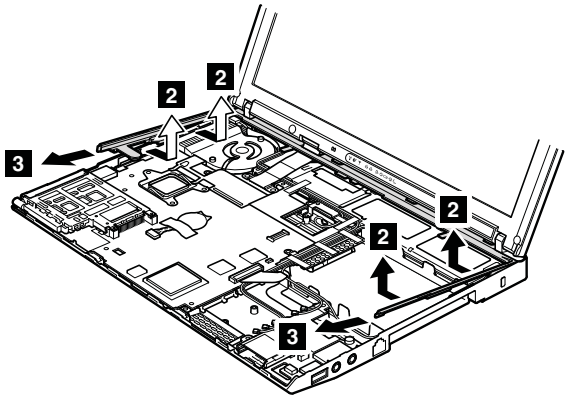

When installing:

Make sure that all the claws are attached firmly.

1110 Monaural speaker assembly (for X200, X200s, X201s, and X201si)

For access, remove these FRUs in order:
- “1010 Battery pack” on page 71
- “1040 Keyboard” on page 77
- “1050 Palm rest or palm rest with fingerprint reader” on page 80

Downloaded from LpManual.com Manuals

Table 19. Removal steps of monaural speaker assembly (for X200, X200s, X201s, and X201si)

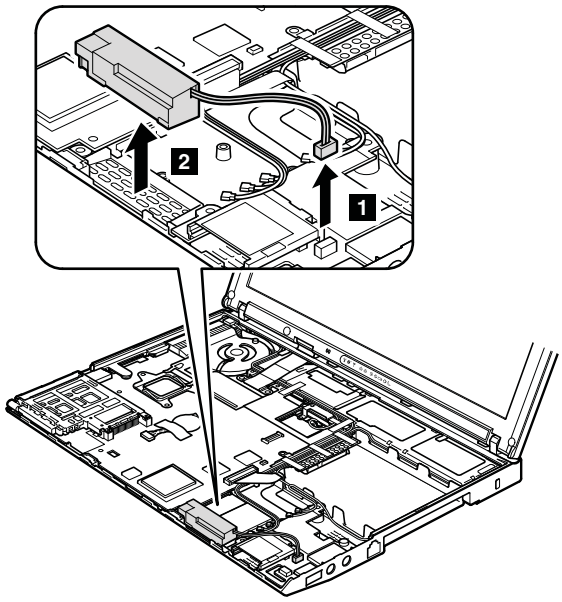

When installing:

Make sure that the speaker connector is attached firmly.

1120 I/O card assembly

For access, remove these FRUs in order:

- “1010 Battery pack” on page 71
- “1040 Keyboard” on page 77
- “1050 Palm rest or palm rest with fingerprint reader” on page 80
- “1110 Monaural speaker assembly (for X200, X200s, X201s, and X201si)” on page 89

Downloaded from LpManual.com Manuals

Table 20. Removal steps of I/O card assembly

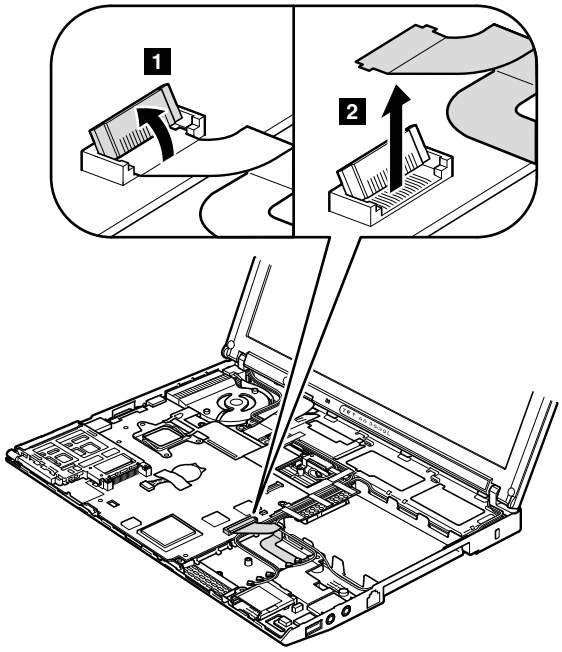

Note: The cable is secured with a double-faced adhesive tape.

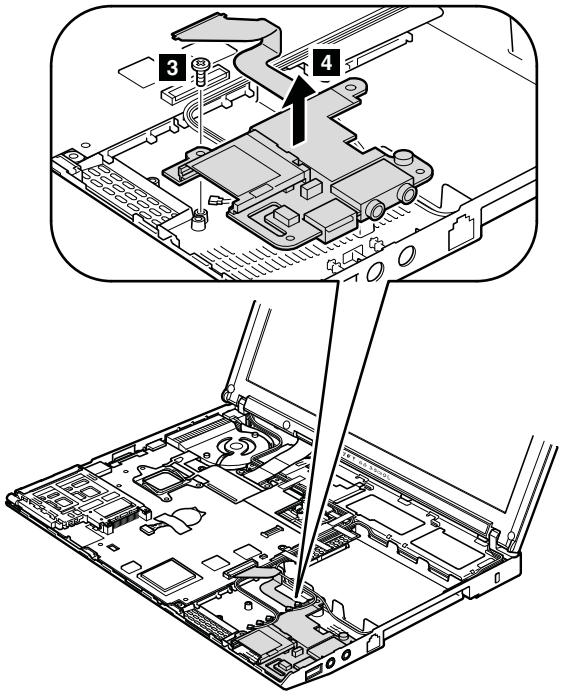

Note: Step a is only for ThinkPad X201. For the other models, skip the step a.

Step	Screw (quantity)	Color	Torque
2	M2 × 3.5 mm, wafer-head, nylon-coated (1)	Silver	0.181 Nm (1.85 kgf-cm)

Downloaded from LpManual.com Manuals

Table 20. Removal steps of I/O card assembly (continued)

Turn the I/O card over, and then disconnect the cable from the flip-lock ZIF connector.

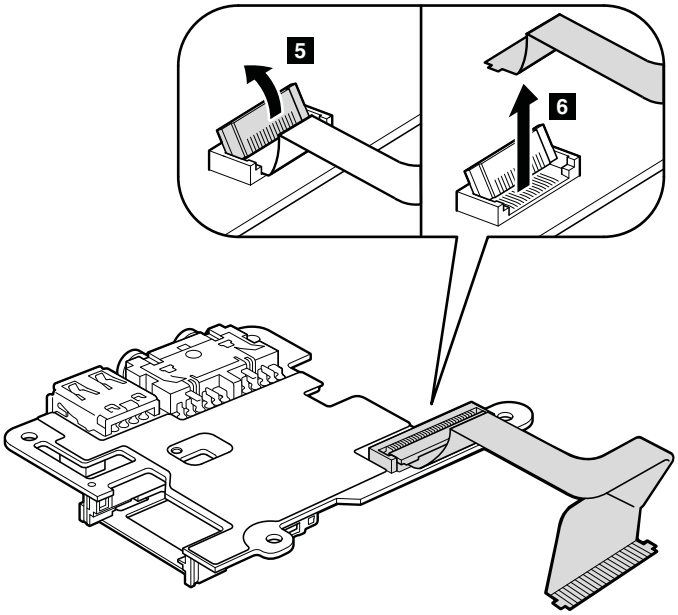

1130 LCD assembly

For access, remove these FRUs in order:

- “1010 Battery pack” on page 71
- “1040 Keyboard” on page 77
- “1050 Palm rest or palm rest with fingerprint reader” on page 80
- “1070 PCI Express Mini Card for wireless LAN/WiMAX” on page 83
- “1080 PCI Express Mini Card for wireless WAN” on page 86
- “1090 Intel Turbo Memory Minicard or Wireless USB PCI Express Half-Mini Card” on page 87
- “1100 Keyboard bezel” on page 88

Table 21. Removal steps of LCD assembly

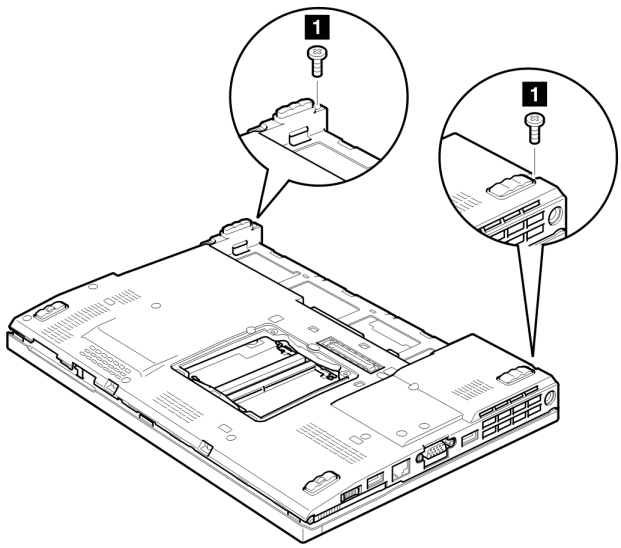

Downloaded from LpManual.com Manuals

Table 21. Removal steps of LCD assembly (continued)

Step	Screw (quantity)	Color	Torque
1	M2 × 5 mm, wafer-head, nylon-coated (2)	Black	0.181 Nm (1.85 kgf-cm)

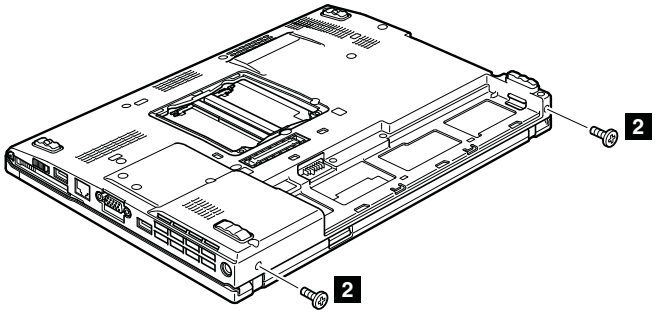

Step	Screw (quantity)	Color	Torque
2	M2 × 5 mm, wafer-head, nylon-coated (2)	Black	0.181 Nm (1.85 kgf-cm)

Before step 3, strip off the tapes securing the antenna cables, and release the cables from the cable guides of the frame.

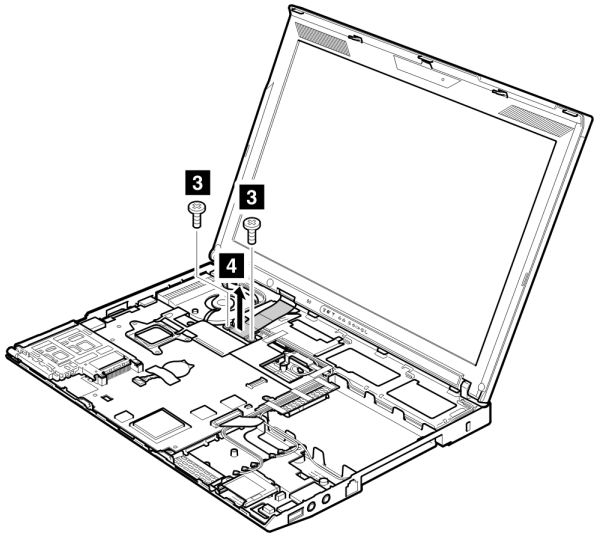

Step	Screw (quantity)	Color	Torque
3	M2 × 5 mm, wafer-head, nylon-coated (2)	Black	0.181 Nm (1.85 kgf-cm)

Downloaded from LpManual.com Manuals

Table 21. Removal steps of LCD assembly (continued)

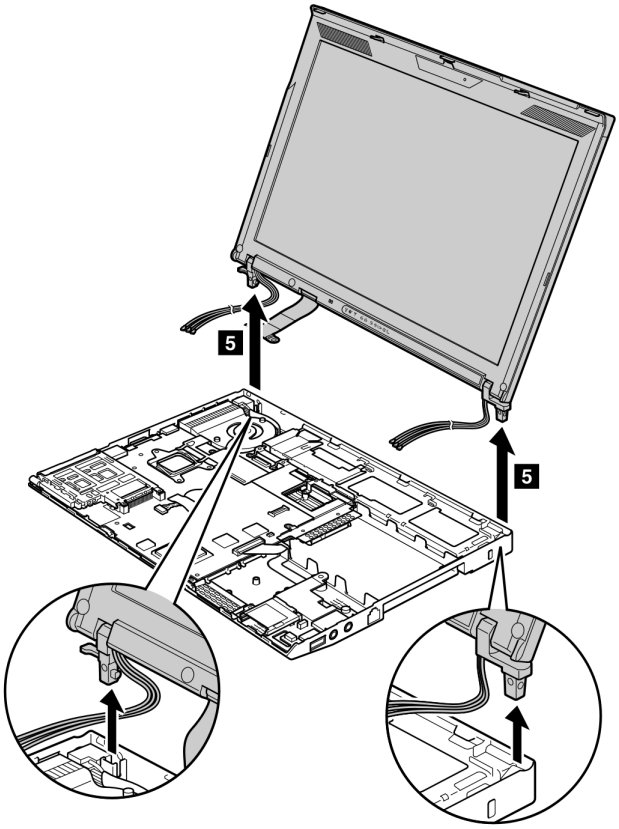

When installing:

1. Route the antenna cables along the cable guides and secure them with the tapes. As you route the cables, make sure that they are not subjected to any tension. Tension could cause the cables to be damaged by the cable guides, or a wire to be broken.
2. Make sure that the LCD connector is attached firmly.

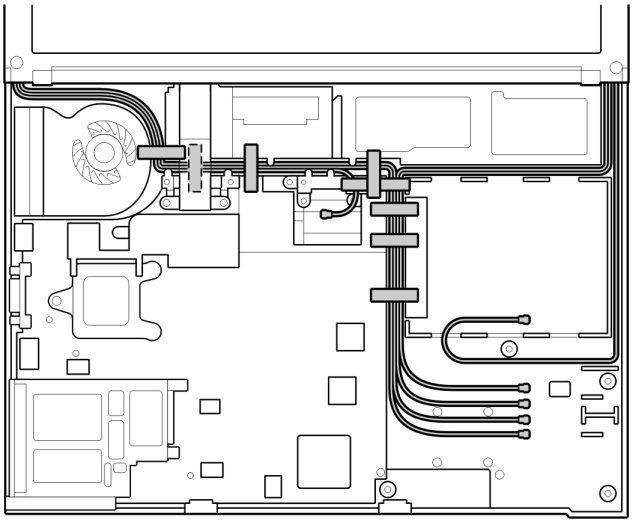

Downloaded from LpManual.com Manuals

1140 Base cover assembly and stereo speaker assembly for X201 and X201i

For access, remove these FRUs in order:

- “1010 Battery pack” on page 71
- “1020 Hard disk drive (HDD) cover, HDD, and HDD rubber rails or solid state drive (SSD) and storage converter” on page 71
- “1030 DIMM” on page 74
- “1040 Keyboard” on page 77
- “1050 Palm rest or palm rest with fingerprint reader” on page 80
- “1060 Backup battery” on page 82
- “1070 PCI Express Mini Card for wireless LAN/WiMAX” on page 83
- “1080 PCI Express Mini Card for wireless WAN” on page 86
- “1090 Intel Turbo Memory Minicard or Wireless USB PCI Express Half-Mini Card” on page 87
- “1100 Keyboard bezel” on page 88
- “1110 Monaural speaker assembly (for X200, X200s, X201s, and X201si)” on page 89
- “1120 I/O card assembly” on page 90
- “1130 LCD assembly” on page 92

Table 22. Removal steps of base cover assembly for ThinkPad X200, X201, and X201i

ThinkPad X200, X201, and X201

Remove the top shielding assembly at first.

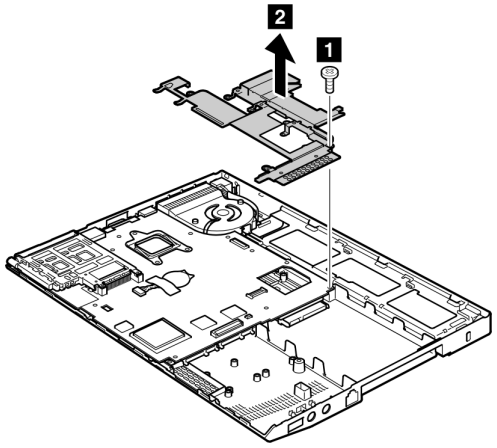

Step	Screw (quantity)	Color	Torque
1	M2 × 3 mm, wafer-head, nylon-coated (1)	Black	0.181 Nm (1.85 kgf-cm)

Downloaded from LpManual.com Manuals

Table 22. Removal steps of base cover assembly for ThinkPad X200, X201, and X201i (continued)

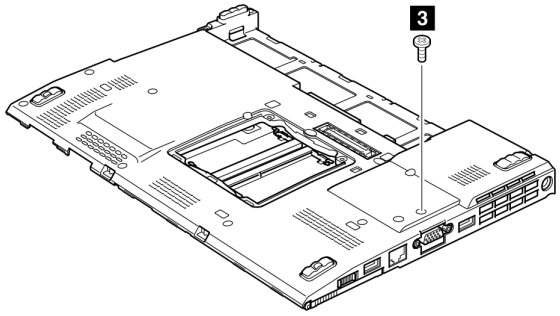

Step	Screw (quantity)	Color	Torque
3	M2 × 3.5 mm, wafer-head, nylon-coated (1)	Black	0.181 Nm (1.85 kgf-cm)

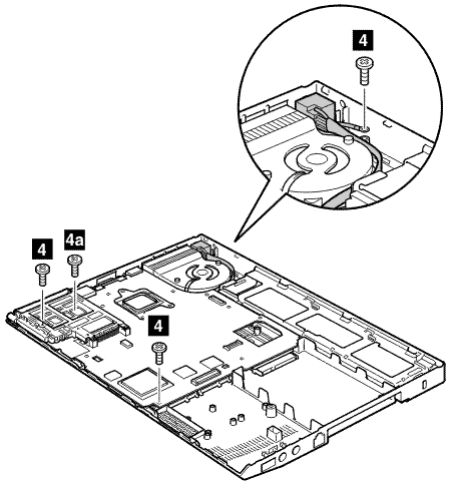

Note: Step 4a is only for X201 and X201i.

Step	Screw (quantity)	Color	Torque
4	M2 × 3.5 mm, wafer-head, nylon-coated (3)	Silver	0.181 Nm (1.85 kgf-cm)
4a	M2 × 3.5 mm, wafer-head, nylon-coated (1)	Silver	0.181 Nm (1.85 kgf-cm)

Downloaded from LpManual.com Manuals

Table 22. Removal steps of base cover assembly for ThinkPad X200, X201, and X201i (continued)

In step 5 and 6, remove the system board, the DC-in connector, and the fan assembly together from the base cover assembly.

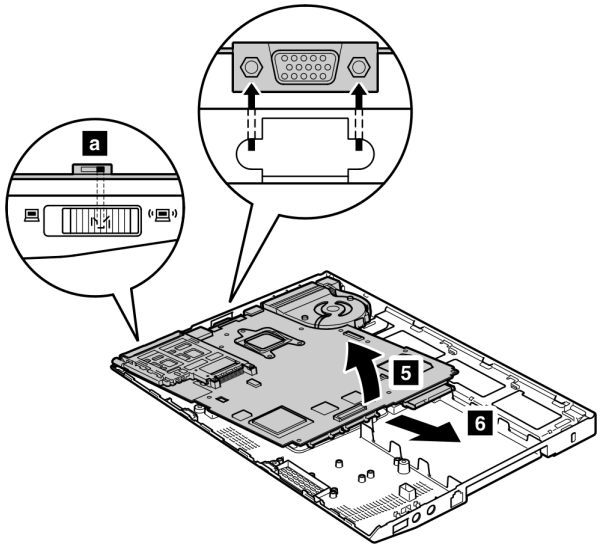

When installing:

Check the position of the wireless switch a, and firmly fit the system board into the base cover assembly.

Note: Following step is only for ThinkPad X201 and X201i.

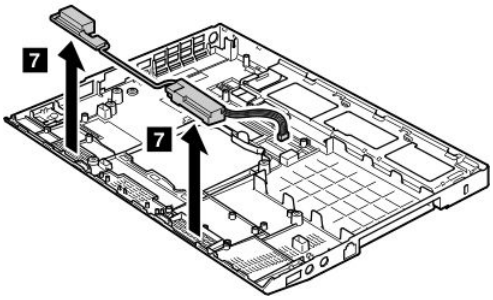

Cable routing:

Route the speaker cable as shown in this figure.

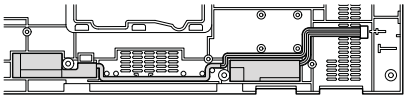

Downloaded from LpManual.com Manuals

Table 23. Removal steps of base cover assembly for ThinkPad X200s, X200si, and X201s

ThinPad X200s, X200si and X201s

Remove the top shielding assembly at first.

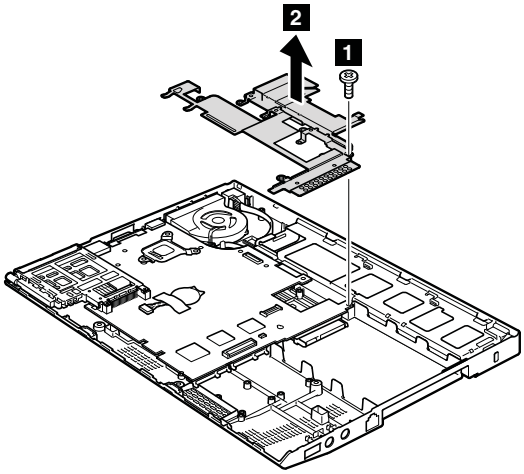

Step	Screw (quantity)	Color	Torque
1	M2 × 3 mm, wafer-head, nylon-coated (1)	Black	0.181 Nm (1.85 kgf-cm)

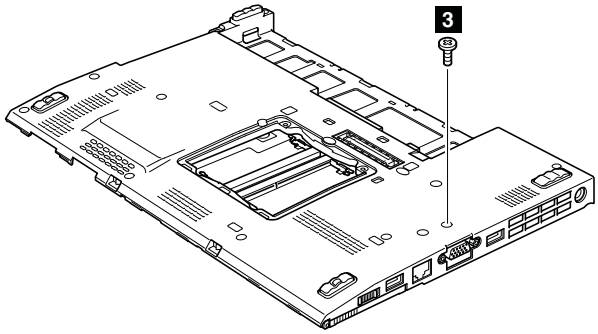

Step	Screw (quantity)	Color	Torque
3	M2 × 3.5 mm, wafer-head, nylon-coated (1)	Black	0.181 Nm (1.85 kgf-cm)

Downloaded from LpManual.com Manuals

Table 23. Removal steps of base cover assembly for ThinkPad X200s, X200si, and X201s (continued)

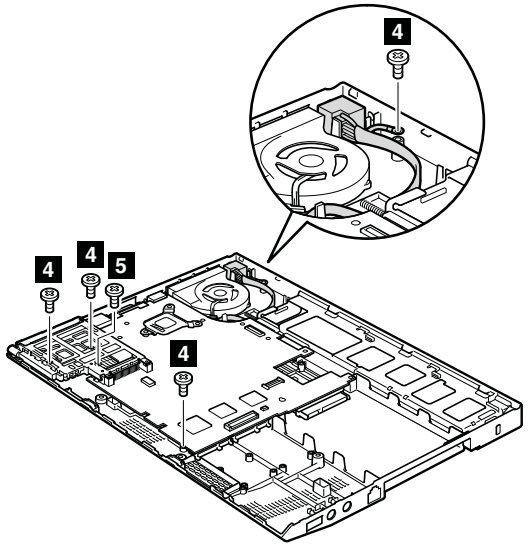

Step	Screw (quantity)	Color	Torque
4	M2 × 3.5 mm, wafer-head, nylon-coated (4)	Silver	0.181 Nm (1.85 kgf-cm)
5	M2 × 3 mm, large-head, nylon-coated (1)	Silver	0.181 Nm (1.85 kgf-cm)

In step 6 and 7, remove the system board, the DC-in connector, and the fan assembly together from the base cover assembly.

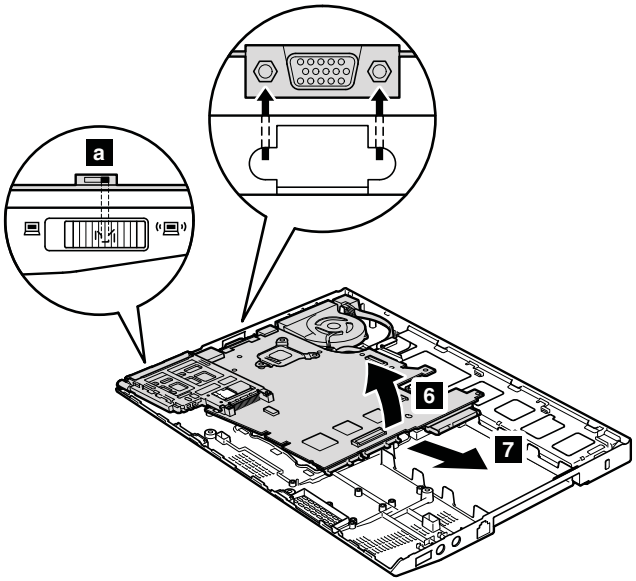

When installing:

Attach the wireless radio switch as shown in the figure a.

Downloaded from LpManual.com Manuals

Applying labels to the base cover:
The new base cover FRU is shipped with a kit containing labels of several kinds. When you replace the base cover, you need to apply the following labels:

Note: If the Windows Authentication label (COA) 3 is attached to a part that is replaced, return the old part with the label attached to the customer, or provide a letter to the customer stating what the label was originally on the system and what the label part number, serial number, and product key were.

1	Product label
2	Homologation label
2a	Non-mercury label **Note:** If the computer you are servicing is an LED-backlight LCD model, you need to paste this label so that the notice for mercury is covered.

Following labels need to be peeled off from the old base cover, and need to be put on the new base cover.

3	Windows license label (COA)
4	Serial number label
5	MAC address label
6	IMEI label
7	FCC-ID label for Wireless LAN
8	FCC-ID label for Wireless WAN
9	China modem label
10	SIRIM label

For some models, you need to apply one or two FCC labels, 7 or 8. Check the old base cover; if it has one or two FCC labels, find duplicates of them in the label kit and apply them to the new base cover.

For the location of each label, refer to the following figure:

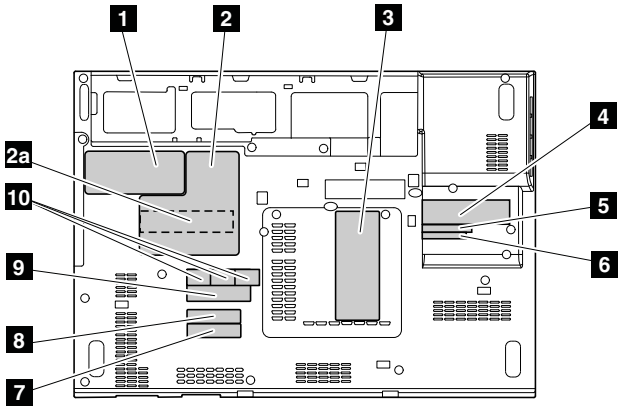

1150 Systemboard, DC-in connector, fan, and ExpressCard slot assembly

Notes: When you replace any of the following system boards, be sure that the new one has the same ROM size as the original one.

Downloaded from LpManual.com Manuals

60Y3787	System board with Intel Core™ 2 Duo mobile processor P8600 (2.4 GHz), non-AMT, TPM, 8-MB ROM
60Y3839	System board with Intel Core 2 Duo mobile processor P8600 (2.4 GHz), non-AMT, TPM, 4-MB ROM
60Y3790	System board with Intel Core 2 Duo mobile processor P8600 (2.4 GHz), non-AMT, non-TPM, 8-MB ROM
60Y3840	System board with Intel Core 2 Duo mobile processor P8600 (2.4 GHz), non-AMT, non-TPM, 4-MB ROM

- To identify the system board originally installed in your computer, go to PEW at the following web site: http://www.lenovo.com/support/site.wss/document.do?lndocid=LOOK-WARNTY
  Select Warranty Lookup. Input the machine type and the serial number. Use the system board listed on PEW.

Important notices for handling the system board:
When handling the system board, bear the following in mind.

- The system board has an accelerometer, which can be broken by applying several thousands of G-forces.

  Note: Dropping a system board from a height of as little as 6 inches so that it falls flat on a hard bench can subject the accelerometer to as much as 6,000 G's of shock.
- Be careful not to drop the system board on a bench top that has a hard surface, such as metal, wood, or composite.
- If a system board is dropped, you must test it, using PC-Doctor for DOS if the system supports PC-Doctor for DOS, to make sure that the HDD Active Protection System™ still functions.

  Note: If the test shows that the HDD Active Protection System is not functioning, be sure to document the drop in a reject report, and replace the system board.
- Avoid rough handling of any kind.
- At every point in the process, be sure not to drop or stack the system board.
- If you put a system board down, be sure to put it only on a padded surface such as an ESD mat or conductive corrugated material.

After replacing the system board, run PC-Doctor for DOS to make sure that HDD Active Protection still functions. The procedure is as follows:

1. Place the computer on a horizontal surface.
2. Run **Diagnostics → ThinkPad Devices → HDD Active Protection Test**.

   Attention: Do not apply physical shock to the computer while the test is running.

For access, remove these FRUs in order:
- “1010 Battery pack” on page 71
- “1020 Hard disk drive (HDD) cover, HDD, and HDD rubber rails or solid state drive (SSD) and storage converter” on page 71
- “1030 DIMM” on page 74
- “1040 Keyboard” on page 77
- “1050 Palm rest or palm rest with fingerprint reader” on page 80
- “1060 Backup battery” on page 82
- “1070 PCI Express Mini Card for wireless LAN/WiMAX” on page 83
- “1080 PCI Express Mini Card for wireless WAN” on page 86
- “1090 Intel Turbo Memory Minicard or Wireless USB PCI Express Half-Mini Card” on page 87
- “1100 Keyboard bezel” on page 88
- “1110 Monaural speaker assembly (for X200, X200s, X201s, and X201si)” on page 89
- “1120 I/O card assembly” on page 90

Downloaded from LpManual.com Manuals

- “1130 LCD assembly” on page 92
- “1140 Base cover assembly and stereo speaker assembly for X201 and X201i” on page 95

Table 24. Removal steps of system board, DC-in connector, fan, and ExpressCard slot assembly for ThinkPad X200, X201, and X201i

Following components soldered on the system board are extremely sensitive. When you service the system board, avoid any kind of rough handling.

ThinkPad X200

a	Accelerometer chip for the HDD Active Protection System™
b	ICH (I/O Controller Hub)
c	CPU
d	MCH (Memory Controller Hub)

Top

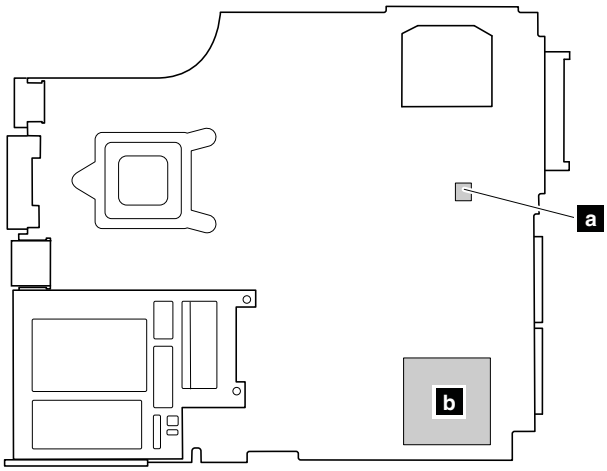

Bottom

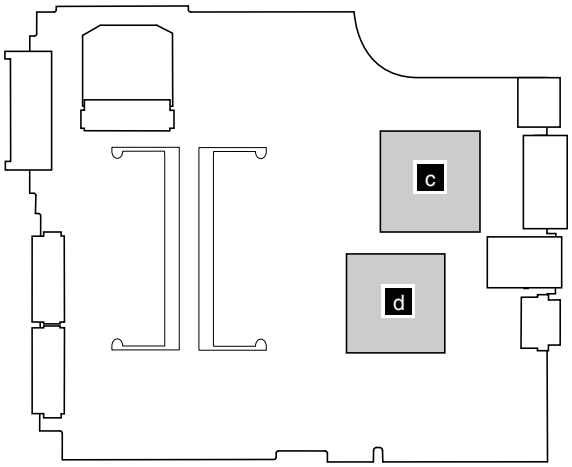

Downloaded from LpManual.com Manuals

Table 24. Removal steps of system board, DC-in connector, fan, and ExpressCard slot assembly for ThinkPad X200, X201, and X201i (continued)

ThinkPad X201 and X201i

a	CPU
b	PCH (Platform Controller Hub)
c	Accelerometer chip for the HDD Active Protection System

Bottom

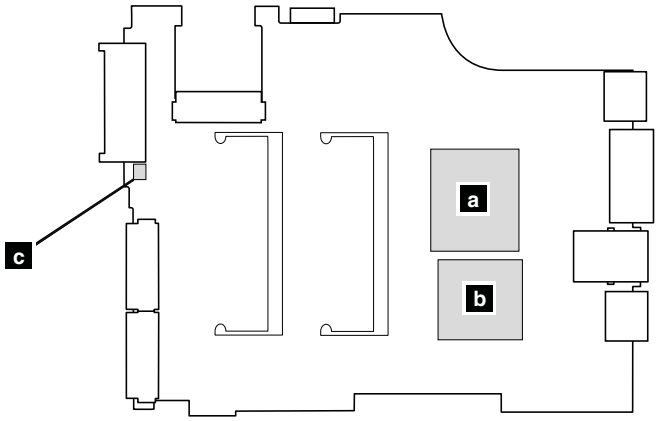

Note: The DC-in connector and the fan assembly are attached to the underside of the system board.

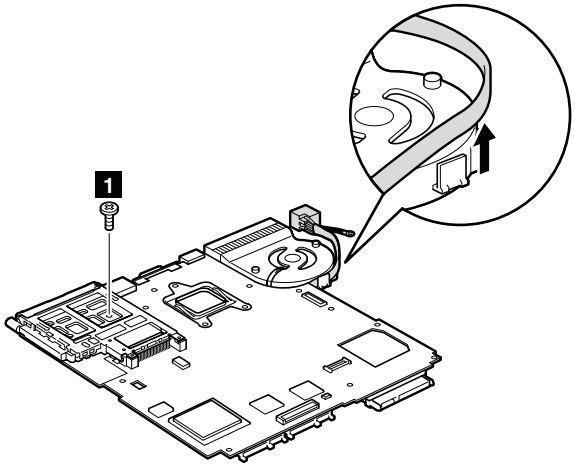

Note: Step 1 is only for ThinkPad X200.

Step	Screw (quantity)	Color	Torque
1	M2 × 3.5 mm, wafer-head, nylon-coated (1)	Silver	0.181 Nm (1.85 kgf-cm)

Downloaded from LpManual.com Manuals

Table 24. Removal steps of system board, DC-in connector, fan, and ExpressCard slot assembly for ThinkPad X200, X201, and X201i (continued)

Turn the system board over, and then disconnect the DC-in connector and the fan connector from the system board.

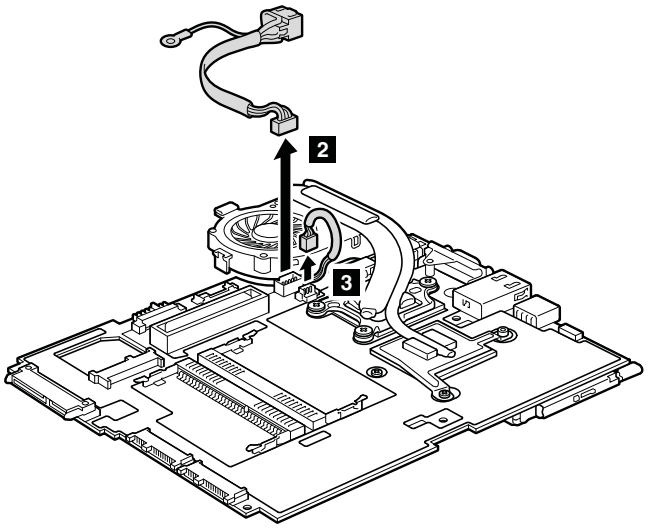

When installing:

Make sure that the DC-in connector and the fan connector are attached to the system board firmly.

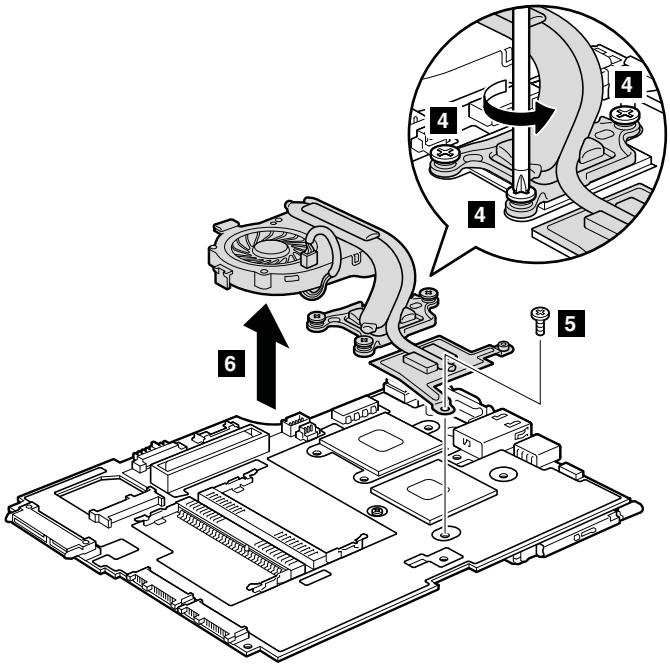

Step	Screw (quantity)	Color	Torque
5	M2 × 3.5 mm, flat-head, nylon-coated (1)	Silver	0.181 Nm (1.85 kgf-cm)

Downloaded from LpManual.com Manuals

Table 24. Removal steps of system board, DC-in connector, fan, and ExpressCard slot assembly for ThinkPad X200, X201, and X201i (continued)

When installing:

- Before you attach the fan assembly to the computer, apply thermal grease, at an amount of 0.2 grams, on the part marked **a** as in the following figure. Either too much or too less application of grease can cause a thermal problem due to imperfect contact with a component. You need to peel the thin film off from the rubber **b**.

For ThinkPad X200:

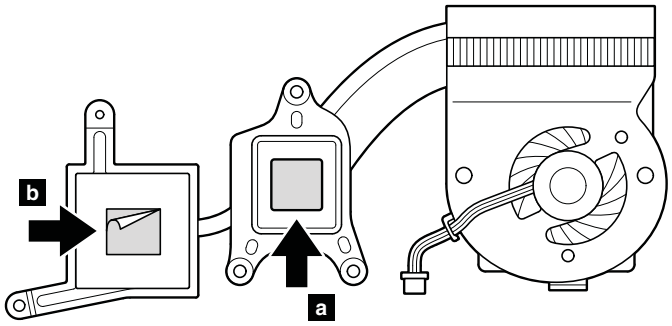

For ThinkPad X201 and X201i:

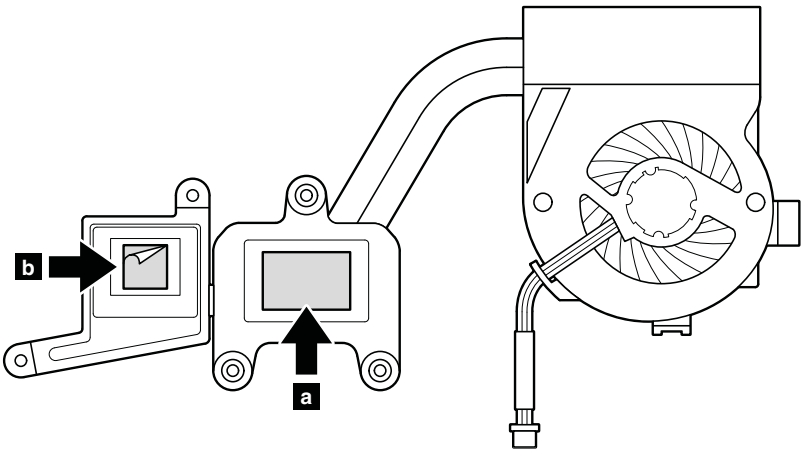

- Make sure that the fan connector is attached firmly.

Note: The ExpressCard slot assembly is attached to the system board.

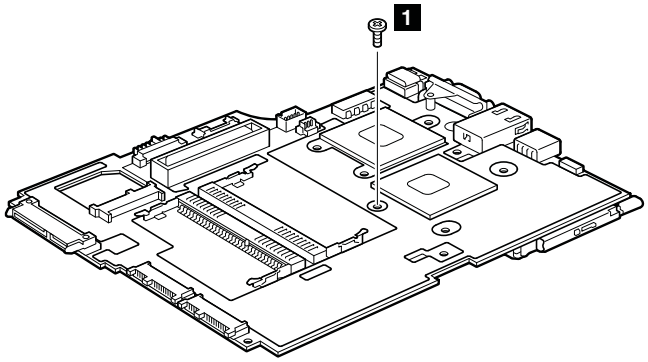

Downloaded from LpManual.com Manuals

Table 24. Removal steps of system board, DC-in connector, fan, and ExpressCard slot assembly for ThinkPad X200, X201, and X201i (continued)

Step	Screw (quantity)	Color	Torque
1	M2 × 3.5 mm, flat-head, nylon-coated (1)	Silver	0.181 Nm (1.85 kgf-cm)

Turn the system board over, and then remove the ExpressCard slot assembly from the system board.

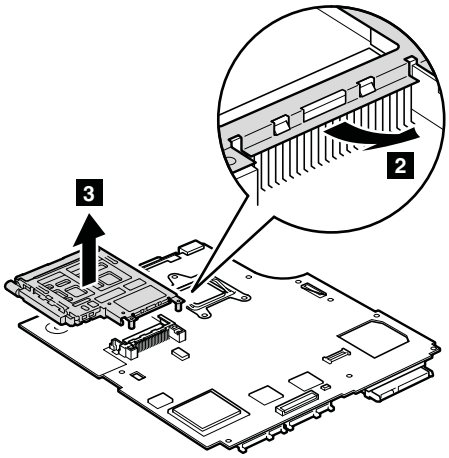

Table 25. Removal steps of system board, DC-in connector, fan, and ExpressCard slot assembly for ThinkPad X200s and X201s

ThinkPad X200s

Following components soldered on the system board are extremely sensitive. When you service the system board, avoid any kind of rough handling.

a	ICH (I/O Controller Hub)
b	CPU
c	MCH (Memory Controller Hub)
d	Accelerometer chip for the HDD Active Protection System

Top

Downloaded from LpManual.com Manuals

Table 25. Removal steps of system board, DC-in connector, fan, and ExpressCard slot assembly for ThinkPad X200s and X201s (continued)

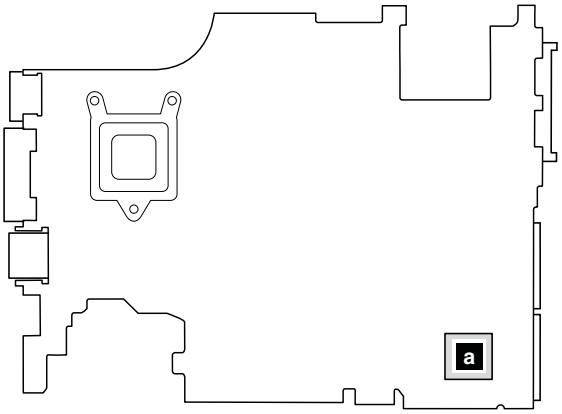

Bottom

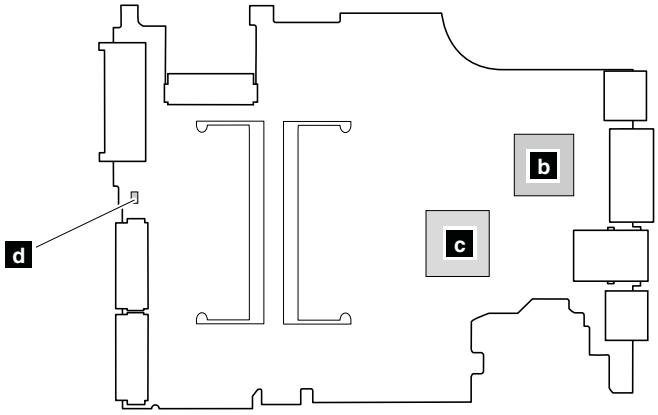

ThinkPad X201s

a	CPU
b	PCH (Platform Controller Hub)
c	Accelerometer chip for the HDD Active Protection System

Bottom

Downloaded from LpManual.com Manuals

Table 25. Removal steps of system board, DC-in connector, fan, and ExpressCard slot assembly for ThinkPad X200s and X201s (continued)

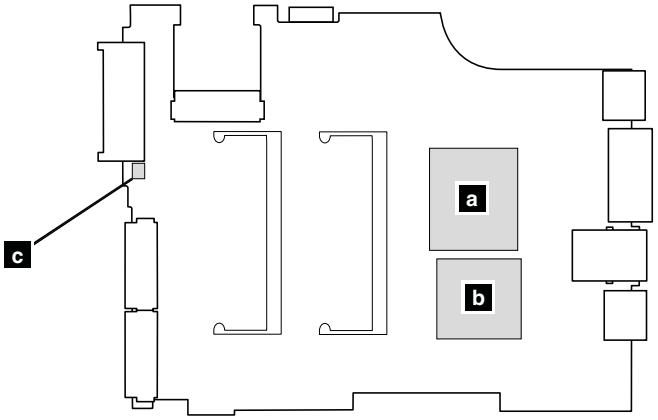

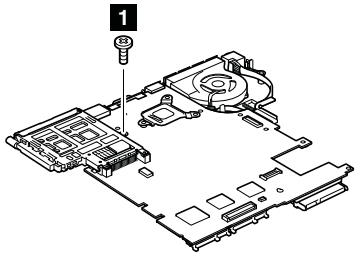

Note: Step 1 in only for ThinkPad X201s.

Step	Screw (quantity)	Color	Torque
1	M2 × 3.5 mm, wafer-head, nylon-coated (1)	Silver	0.181 Nm (1.85 kgf-cm)

Note: The DC-in connector and the fan assembly are attached to the underside of the system board.

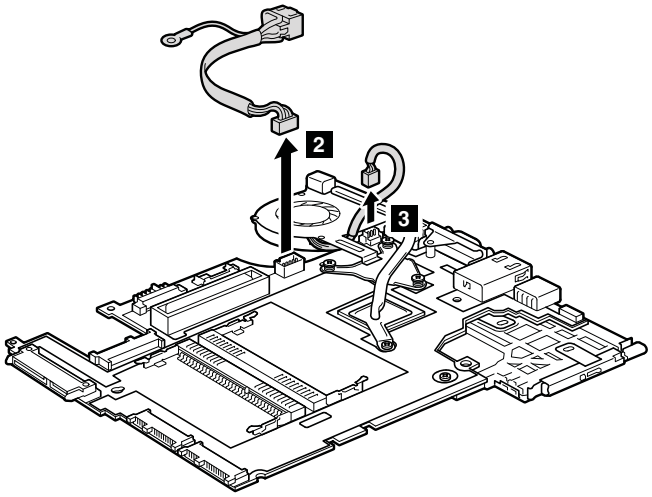

When installing:

Downloaded from LpManual.com Manuals

Table 25. Removal steps of system board, DC-in connector, fan, and ExpressCard slot assembly for ThinkPad X200s and X201s (continued)

Make sure that the DC-in connector and the fan connector are attached to the system board firmly

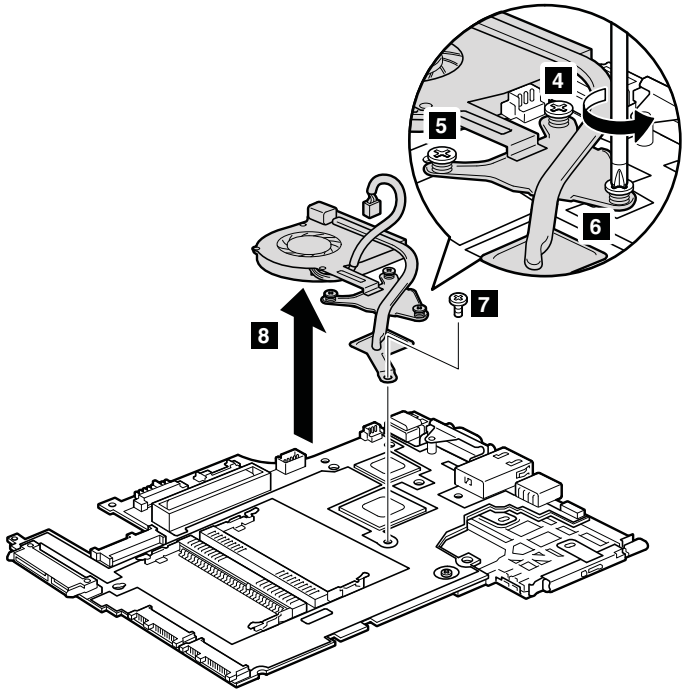

Step	Screw (quantity)	Color	Torque
7	M2 × 3.5 mm, wafer-head, nylon-coated (1)	Silver	0.181 Nm (1.85 kgf-cm)

When installing:

- Before you attach the fan assembly to the computer, apply thermal grease, at an amount of 0.2 grams, on the part marked a as in the following figure. Either too much or too less application of grease can cause a thermal problem due to imperfect contact with a component. You need to peel the thin film off from the rubber b.

For ThinkPad X200s:

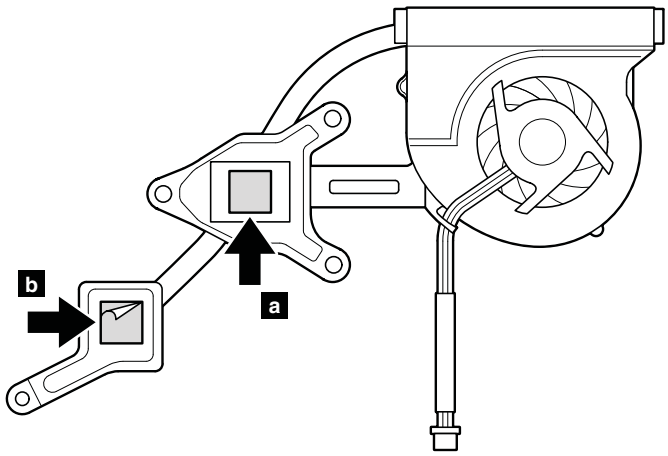

Downloaded from LpManual.com Manuals

Table 25. Removal steps of system board, DC-in connector, fan, and ExpressCard slot assembly for ThinkPad X200s and X201s (continued)

For ThinkPad X201s:

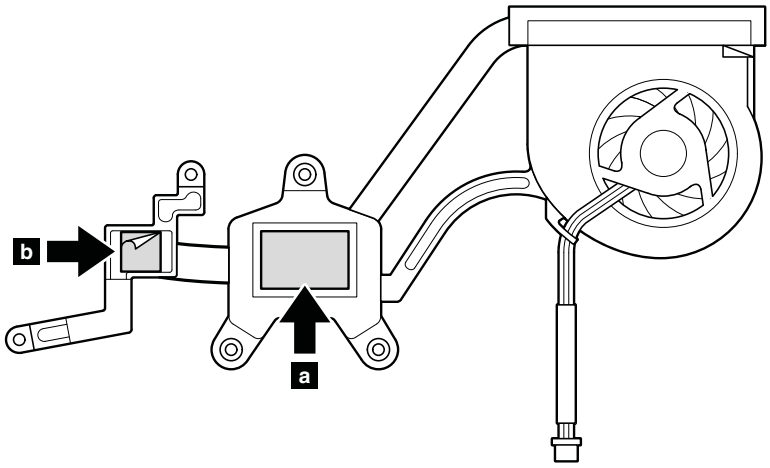

- Make sure that the fan connector is attached firmly.

Note: The ExpressCard slot assembly is attached to the system board.

For ThinkPad X200s:

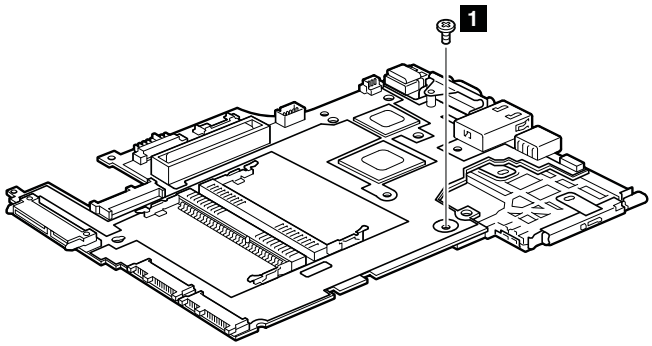

For ThinkPad X201s:

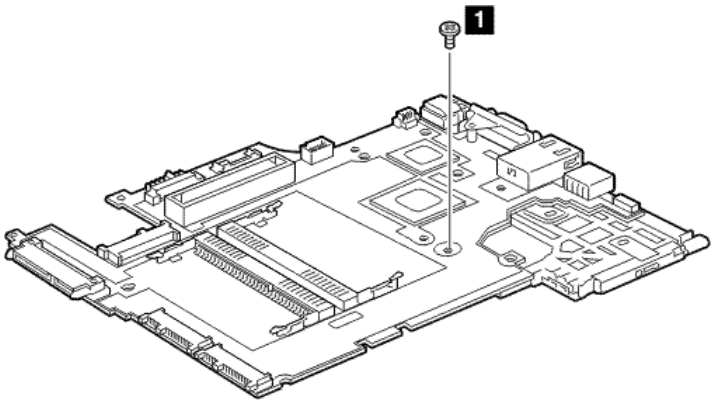

Downloaded from LpManual.com Manuals

Table 25. Removal steps of system board, DC-in connector, fan, and ExpressCard slot assembly for ThinkPad X200s and X201s (continued)

Step	Screw (quantity)	Color	Torque
1	M2 × 3.5 mm, wafer-head, nylon-coated (1)	Silver	0.181 Nm (1.85 kgf-cm)

Turn the system board over, and then remove the ExpressCard slot assembly from the system board.

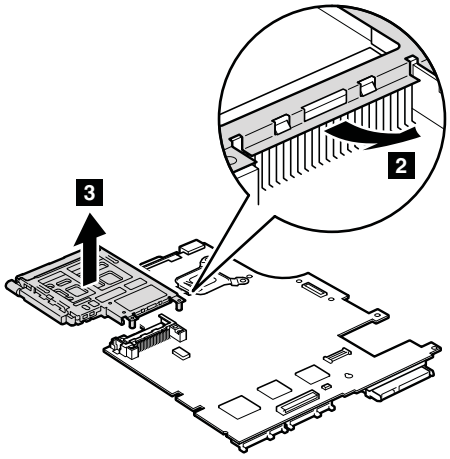

2010 LCD front bezel

For access, remove this FRU:
- "1010 Battery pack" on page 71

Table 26. Removal steps of LCD front bezel for 12.1-in. WXGA LCD model

12.1-in. WXGA LCD model:

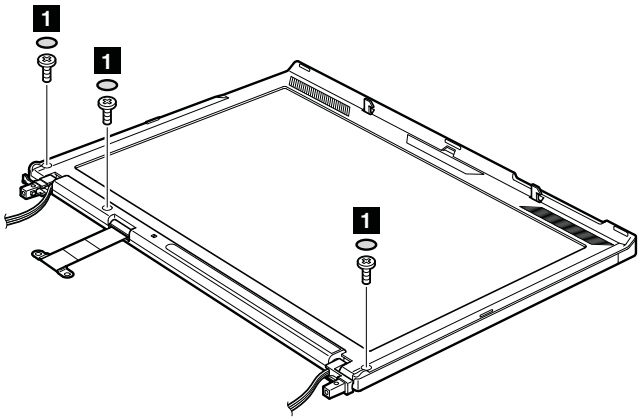

Step	Screw cap	Screw (quantity)	Color	Torque
1	◯	M2.5 × 4 mm, wafer-head, nylon-coated (3)	Black	0.392 Nm (4 kgf-cm)

Downloaded from LpManual.com Manuals

Table 26. Removal steps of LCD front bezel for 12.1-in. WXGA LCD model (continued)

In step **2**, detach the claws. Then remove the LCD front bezel.

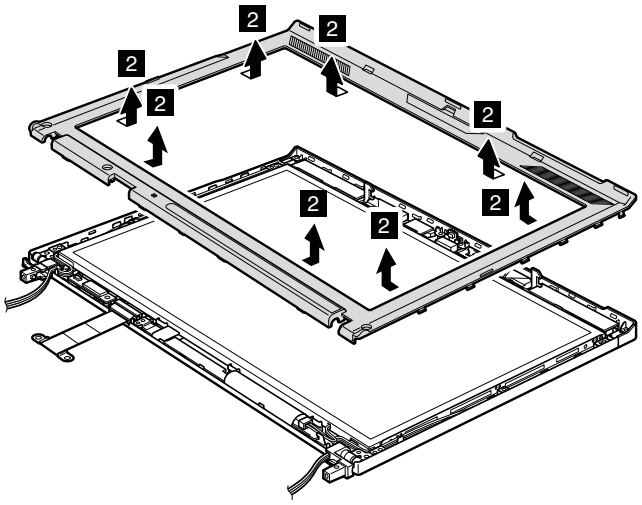

When installing:

Make sure that all the claws are attached firmly.

Table 27. Removal steps of LCD front bezel for 12.1-in. WXGA+ LCD model

12.1-in. WXGA+ LCD model:

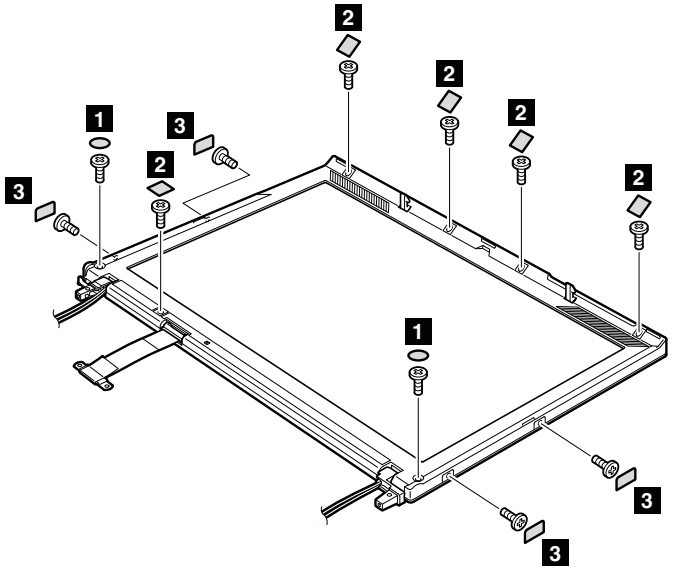

Step	Screw cap	Screw (quantity)	Color	Torque
1	◯	M2.5 × 4 mm, wafer-head, nylon-coated (2)	Black	0.392 Nm (4 kgf-cm)

Downloaded from LpManual.com Manuals

Table 27. Removal steps of LCD front bezel for 12.1-in. WXGA+ LCD model (continued)

2	☐	M2.5 × 4 mm, wafer-head, nylon-coated (5)	Black	0.392 Nm (4 kgf-cm)
3	▭	M2 × 3.5 mm, wafer-head, nylon-coated (4)	Silver	0.181 Nm (1.85 kgf-cm)

In step 4 and 5, detach the claws. Then remove the LCD front bezel.

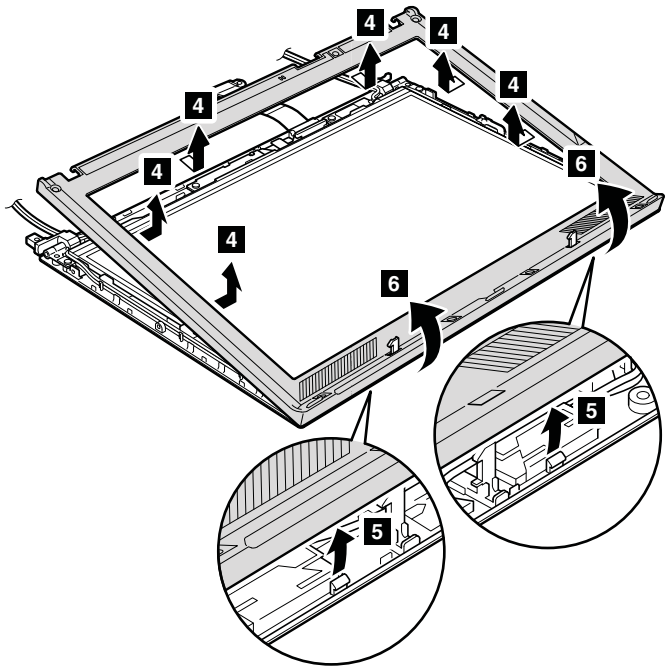

When installing:

Make sure that all the claws are attached firmly.

2020 Inverter card or LED board

For access, remove these FRUs in order:
- “1010 Battery pack” on page 71
- “2010 LCD front bezel” on page 111

Table 28. Removal steps of inverter card or LED board

For ThinkPad X200, X200s, and X200si:

Downloaded from LpManual.com Manuals

Table 28. Removal steps of inverter card or LED board (continued)

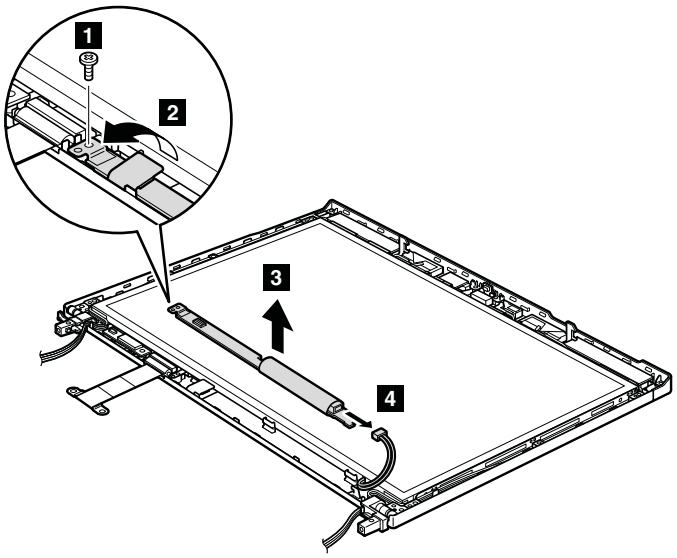

Step	Screw (quantity)	Color	Torque
1	M2 × 3.5 mm, wafer-head, nylon-coated (1)	Silver	0.181 Nm (1.85 kgf-cm)

When installing:

Make sure that the connector 2 and 4 are attached firmly.

Cabling:

When replacing the inverter card or the LED board, route the connector cable as in this figure.

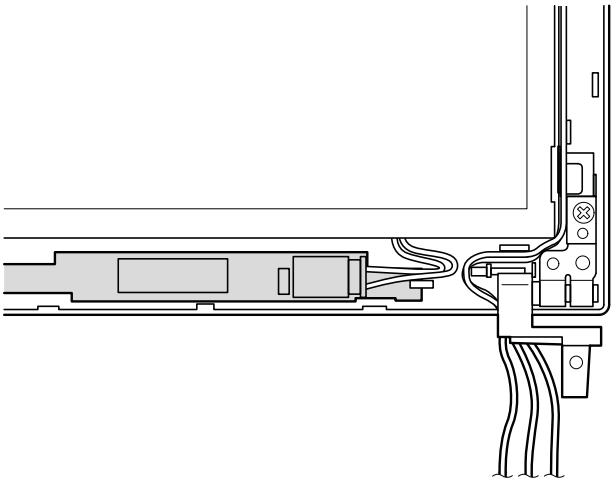

Downloaded from LpManual.com Manuals

Table 28. Removal steps of inverter card or LED board (continued)

For ThinkPad X201, X201i, and X201s:

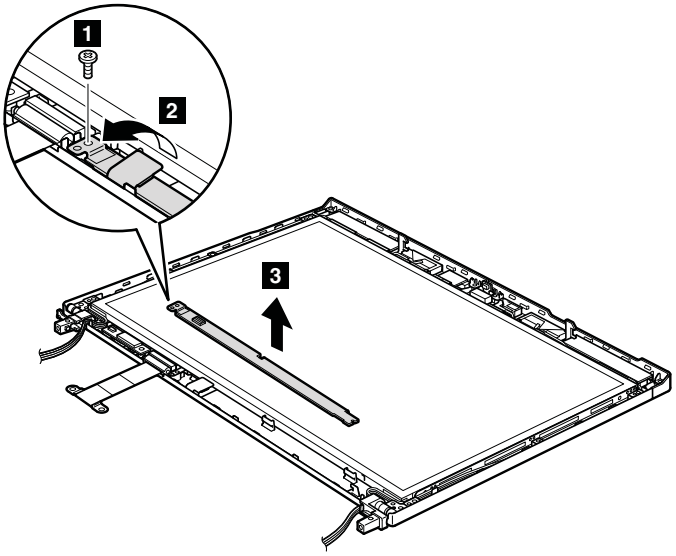

Step	Screw (quantity)	Color	Torque
1	M2 × 3.5 mm, wafer-head, nylon-coated (1)	Silver	0.181 Nm (1.85 kgf-cm)

When installing:

Make sure that the connector 2 is attached firmly.

2030 Bluetooth daughter card (BDC-2.1)

For access, remove these FRUs in order:

- “1010 Battery pack” on page 71
- “2010 LCD front bezel” on page 111

Downloaded from LpManual.com Manuals

Table 29. Removal steps of Bluetooth daughter card

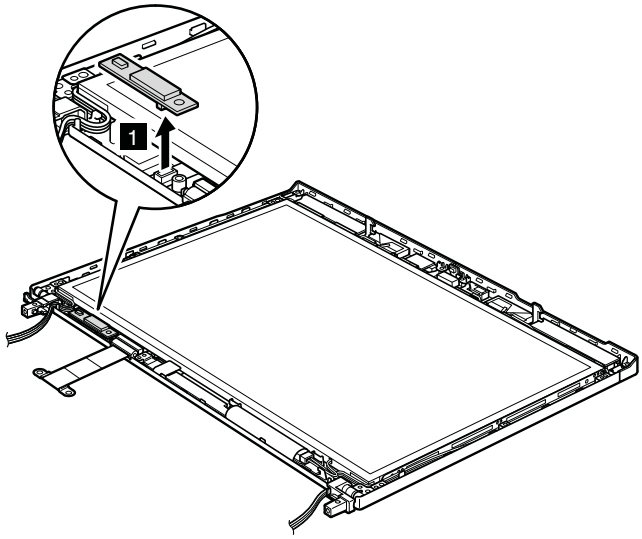

When installing:

Make sure that the connector 1 is attached firmly.

2040 Integrated camera

For access, remove these FRUs in order:

- “1010 Battery pack” on page 71
- “2010 LCD front bezel” on page 111

Downloaded from LpManual.com Manuals

Table 30. Removal steps of Integrated camera

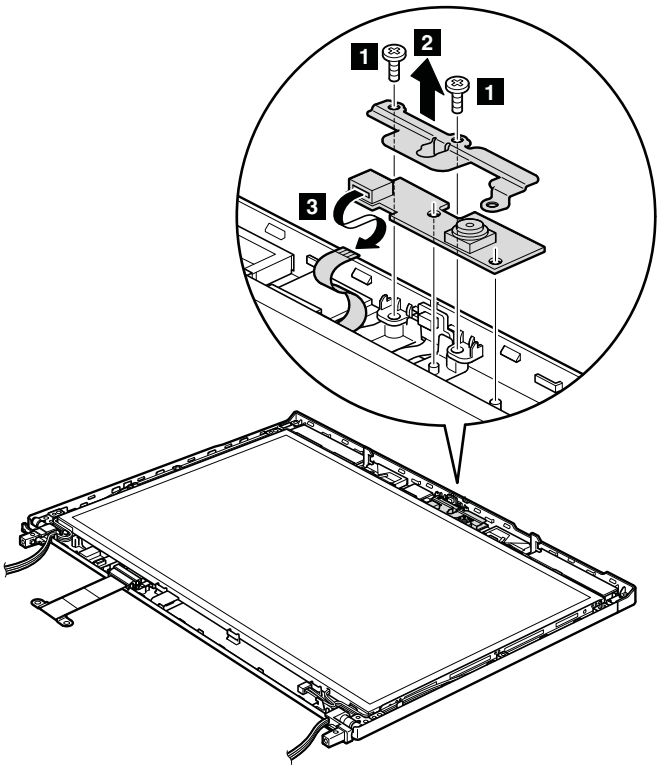

Step	Screw (quantity)	Color	Torque
1	M2 × 3.5 mm, wafer-head, nylon-coated (2)	Silver	0.181 Nm (1.85 kgf-cm)

2050 LCD panel, LCD brackets, and LCD cable

For access, remove these FRUs in order:

- “1010 Battery pack” on page 71
- “1040 Keyboard” on page 77
- “1050 Palm rest or palm rest with fingerprint reader” on page 80
- “1070 PCI Express Mini Card for wireless LAN/WiMAX” on page 83
- “1080 PCI Express Mini Card for wireless WAN” on page 86
- “1090 Intel Turbo Memory Minicard or Wireless USB PCI Express Half-Mini Card” on page 87
- “1100 Keyboard bezel” on page 88
- “1130 LCD assembly” on page 92
- “2010 LCD front bezel” on page 111
- “2020 Inverter card or LED board” on page 113
- “2030 Bluetooth daughter card (BDC-2.1)” on page 115
- “2040 Integrated camera” on page 116

Downloaded from LpManual.com Manuals

Table 31. Removal steps of LCD panel, LCD brackets, and LCD cable for 12.1-in. WXGA LCD model

12.1-in. WXGA LCD model:

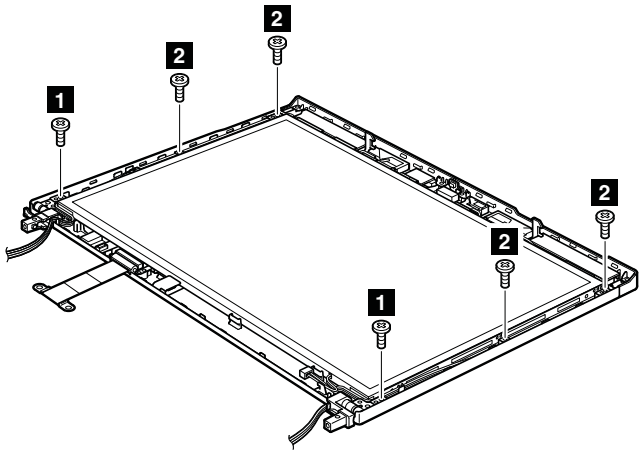

Step	Screw (quantity)	Color	Torque
1	M2.5 × 4 mm, wafer-head, nylon-coated (2)	Black	0.392 Nm (4 kgf-cm)
2	M2 × 3.5 mm, wafer-head, nylon-coated (4)	Silver	0.181 Nm (1.85 kgf-cm)

Note: Step 3 is only for models without the integrated camera. For models with the integrated camera, skip step 3.

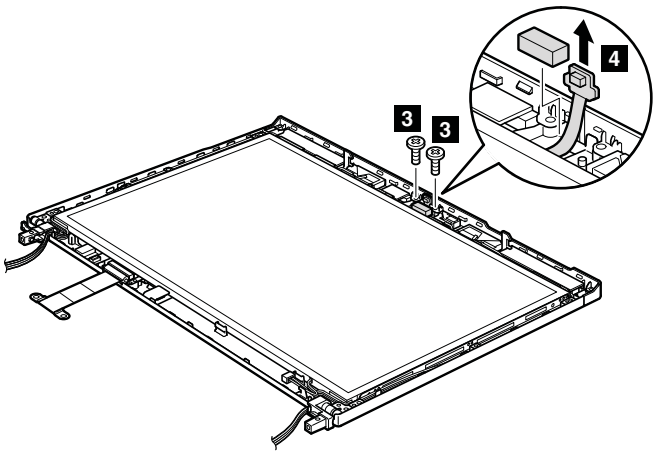

Step	Screw (quantity)	Color	Torque
3	M2 × 3.5 mm, wafer-head, nylon-coated (2)	Silver	0.181 Nm (1.85 kgf-cm)

Downloaded from LpManual.com Manuals

Table 31. Removal steps of LCD panel, LCD brackets, and LCD cable for 12.1-in. WXGA LCD model (continued)

In step **5**, release the antenna cables from the cable guides, and then remove the LCD panel.

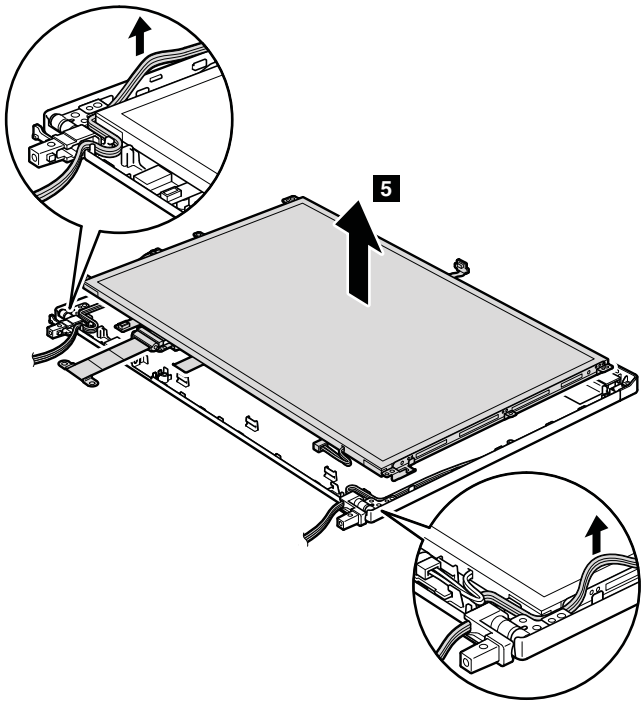

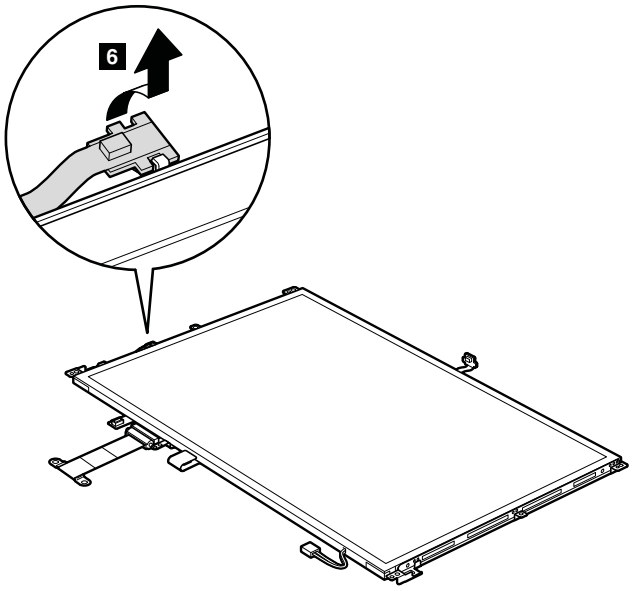

Downloaded from LpManual.com Manuals

Table 31. Removal steps of LCD panel, LCD brackets, and LCD cable for 12.1-in. WXGA LCD model (continued)

Remove the LCD bracket a.

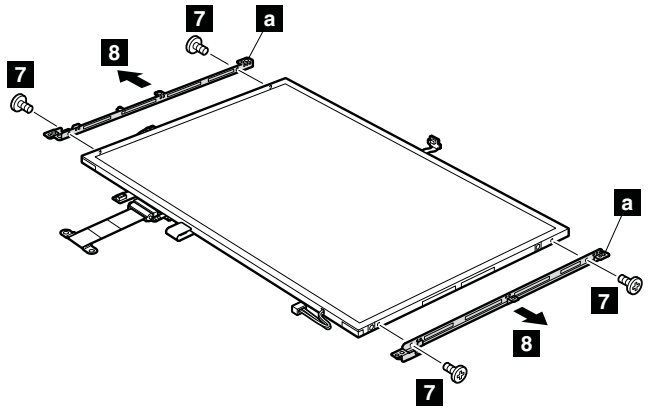

Step	Screw (quantity)	Color	Torque
7	M2 × 2 mm, wafer-head, nylon-coated (4)	Black	0.181 Nm (1.85 kgf-cm)

Turn the LCD panel over, and then remove the LCD cable b from the LCD panel.

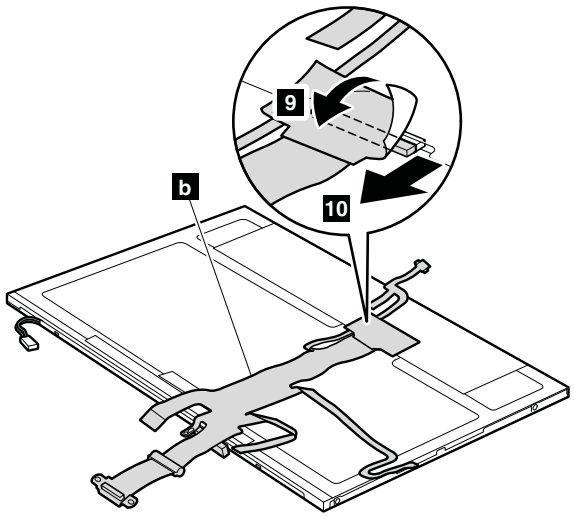

When installing:

Make sure that the LCD cable connector is attached firmly.

Downloaded from LpManual.com Manuals

Table 32. Removal steps of LCD panel, LCD brackets, and LCD cable for 12.1-in. WXGA+ LCD model

12.1-in. WXGA+ LCD model:

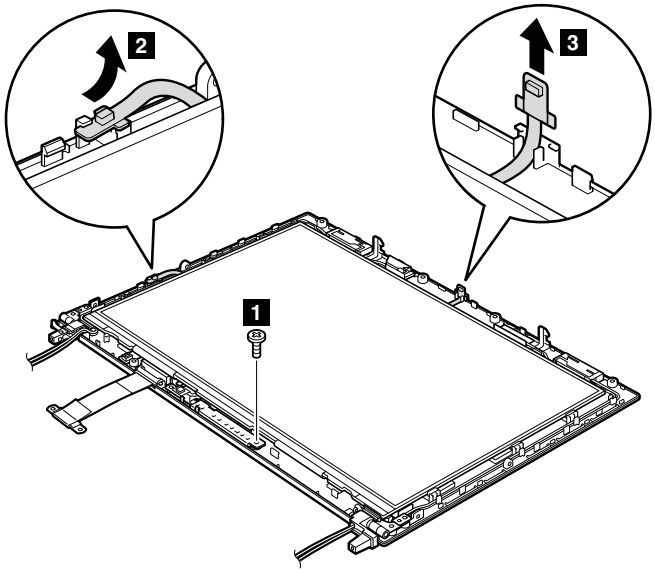

Step	Screw (quantity)	Color	Torque
1	M2 x 2 mm, wafer-head, nylon-coated (1)	Silver	0.181 Nm (1.85 kgf-cm)

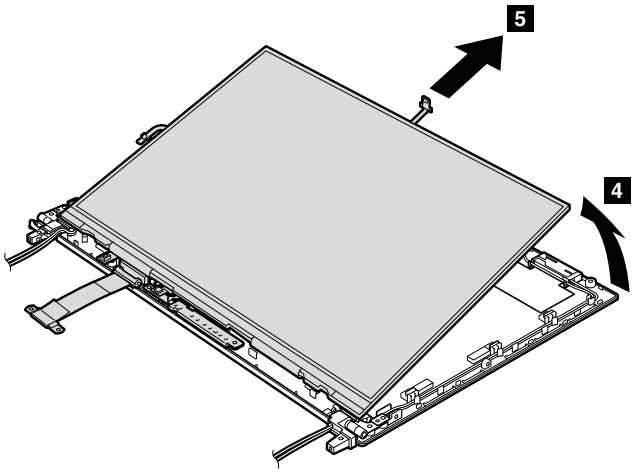

Downloaded from LpManual.com Manuals

Table 32. Removal steps of LCD panel, LCD brackets, and LCD cable for 12.1-in. WXGA+ LCD model (continued)

Turn the LCD panel over, and then remove the LCD cable c from the LCD panel.

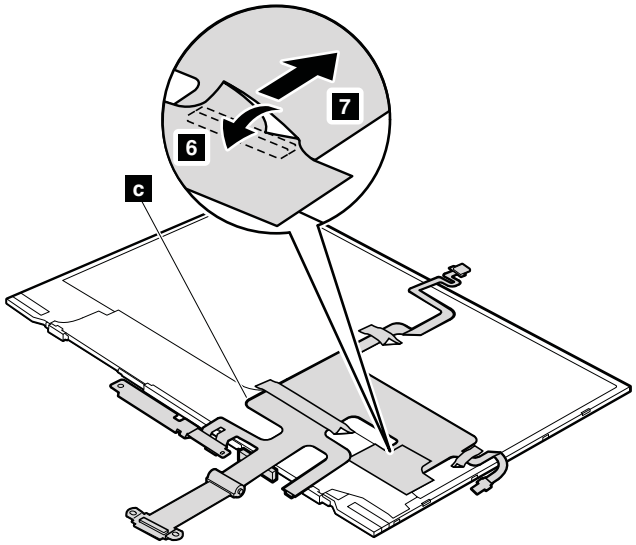

When installing:

Make sure that the LCD cable connector is attached firmly.

2060 Hinges and hinge brackets

For access, remove these FRUs in order:

- “1010 Battery pack” on page 71
- “1040 Keyboard” on page 77
- “1050 Palm rest or palm rest with fingerprint reader” on page 80
- “1070 PCI Express Mini Card for wireless LAN/WiMAX” on page 83
- “1080 PCI Express Mini Card for wireless WAN” on page 86
- “1090 Intel Turbo Memory Minicard or Wireless USB PCI Express Half-Mini Card” on page 87
- “1100 Keyboard bezel” on page 88
- “1130 LCD assembly” on page 92
- “2010 LCD front bezel” on page 111
- “2020 Inverter card or LED board” on page 113
- “2030 Bluetooth daughter card (BDC-2.1)” on page 115
- “2040 Integrated camera” on page 116
- “2050 LCD panel, LCD brackets, and LCD cable” on page 117

Downloaded from LpManual.com Manuals

Table 33. Removal steps of hinges for 12.1-in. WXGA LCD model

12.1-in. WXGA LCD model:

Remove the hinges.

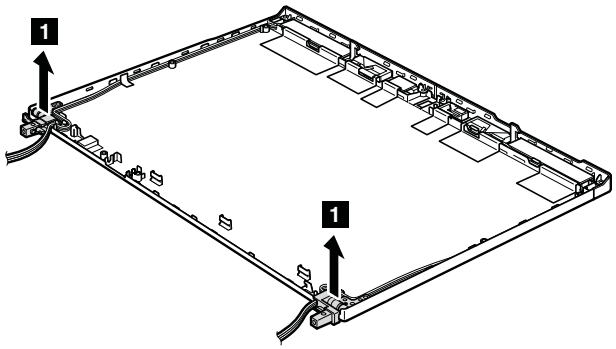

Table 34. Removal steps of hinges and hinge brackets for 12.1-in. WXGA+ LCD model

12.1-in. WXGA+ LCD model:

In step 1, release the antenna cables from the cable guides.

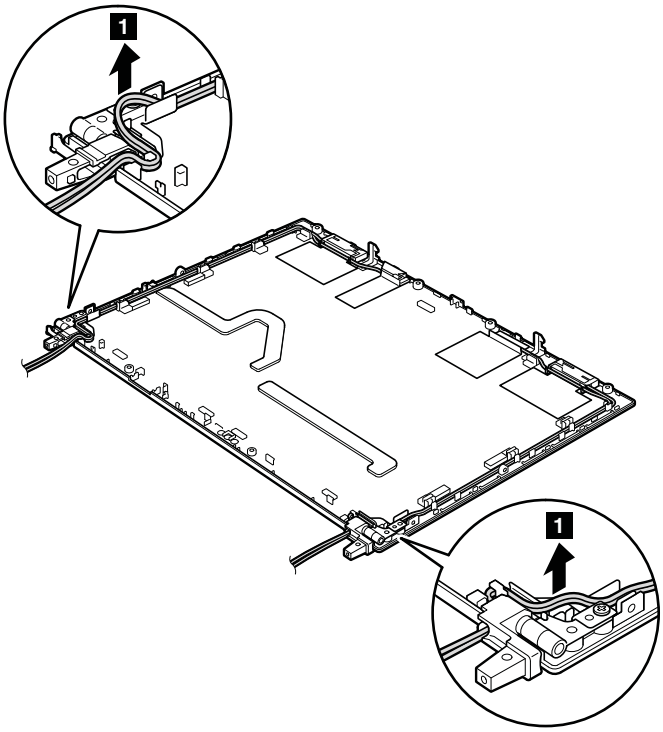

Downloaded from LpManual.com Manuals

Table 34. Removal steps of hinges and hinge brackets for 12.1-in. WXGA+ LCD model (continued)

Remove the hinges **a** and the hinge brackets **b**.

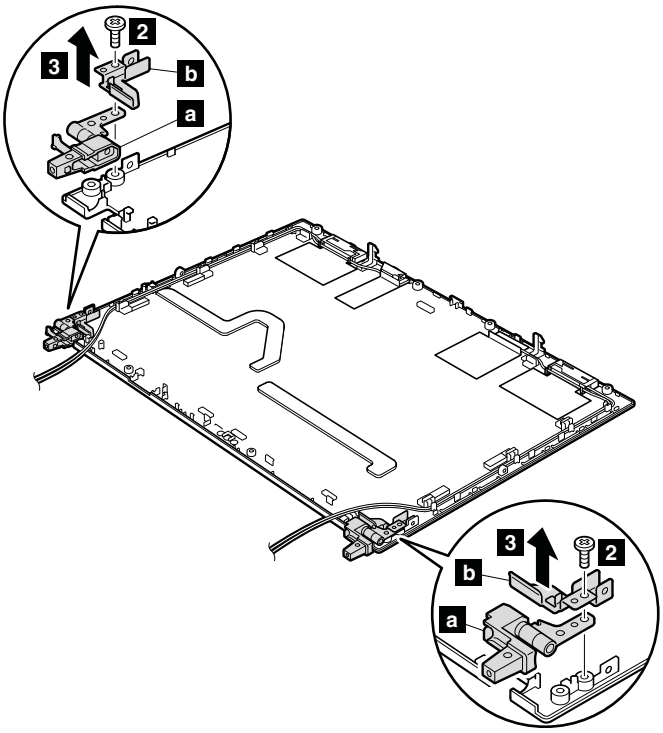

Step	Screw (quantity)	Color	Torque
2	M2.5 x 4 mm, wafer-head, nylon-coated (2)	Black	0.392 Nm (4 kgf-cm)

2070 LCD rear cover and wireless antenna cables

For access, remove these FRUs in order:

- “1010 Battery pack” on page 71
- “1040 Keyboard” on page 77
- “1050 Palm rest or palm rest with fingerprint reader” on page 80
- “1070 PCI Express Mini Card for wireless LAN/WiMAX” on page 83
- “1080 PCI Express Mini Card for wireless WAN” on page 86
- “1090 Intel Turbo Memory Minicard or Wireless USB PCI Express Half-Mini Card” on page 87
- “1100 Keyboard bezel” on page 88
- “1130 LCD assembly” on page 92
- “2010 LCD front bezel” on page 111
- “2020 Inverter card or LED board” on page 113
- “2030 Bluetooth daughter card (BDC-2.1)” on page 115
- “2040 Integrated camera” on page 116
- “2050 LCD panel, LCD brackets, and LCD cable” on page 117
- “2060 Hinges and hinge brackets” on page 122

Downloaded from LpManual.com Manuals

Table 35. Removal steps of LCD rear cover and wireless antenna cables for 12.1-in. WXGA LCD model

12.1-in. WXGA LCD model:

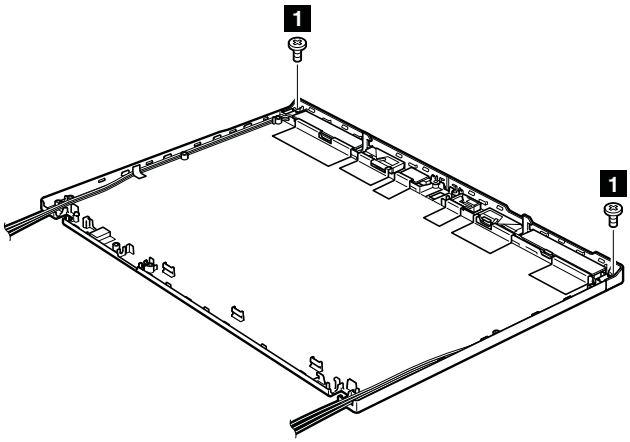

Step	Screw (quantity)	Color	Torque
1	M2 × 3.5 mm, wafer-head, nylon-coated (2)	Silver	0.181 Nm (1.85 kgf-cm)

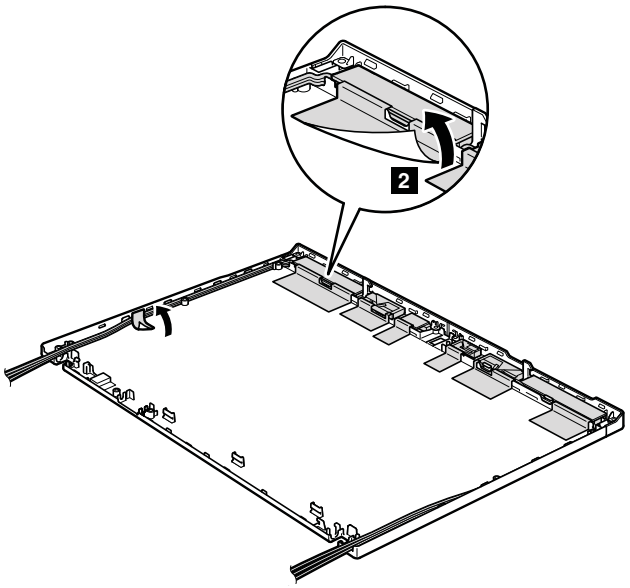

Downloaded from LpManual.com Manuals

Table 35. Removal steps of LCD rear cover and wireless antenna cables for 12.1-in. WXGA LCD model (continued)

In step **3**, release the antenna cables from the cable guides of the rear cover.

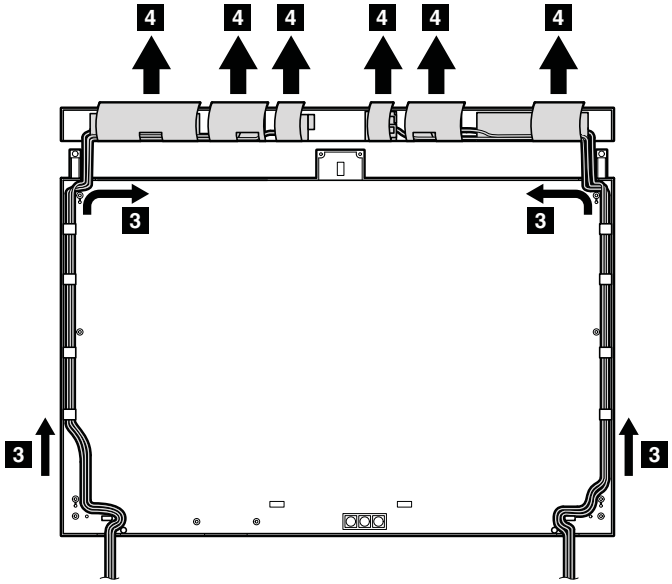

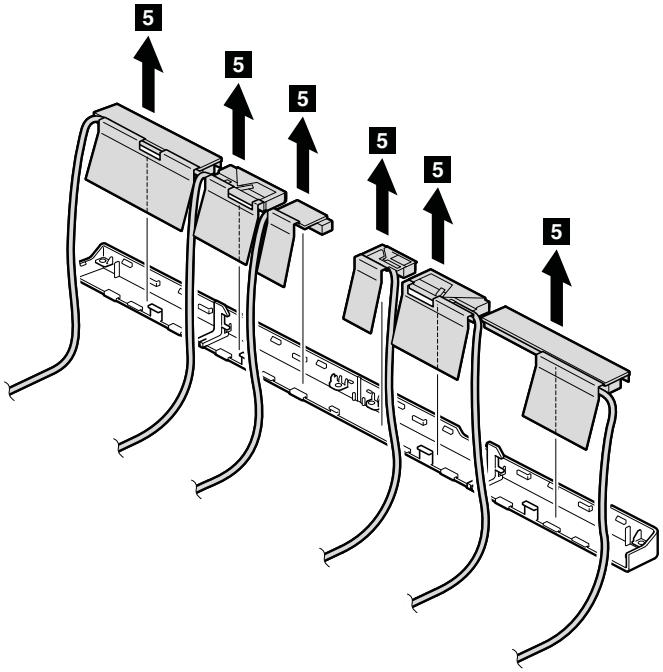

Note: Wireless antennas are secured with double-faced adhesive tapes.

Downloaded from LpManual.com Manuals

Table 35. Removal steps of LCD rear cover and wireless antenna cables for 12.1-in. WXGA LCD model (continued)

When installing:

When you attache the antenna cables, do as follows.

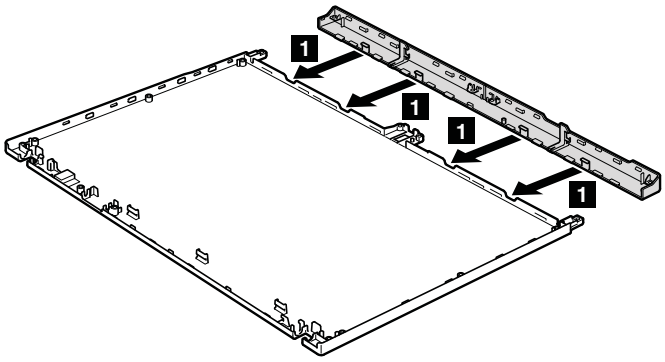

Cable routing: Place the antenna assembly as shown in this figure.

a	Wireless WAN antenna, AUX (blue)
b	Wireless LAN antenna, AUX (black)
c	Wireless USB antenna (yellow)
d	MIMO antenna (white)
e	Wireless LAN antenna, MAIN (gray)
f	Wireless WAN antenna, MAIN (red)

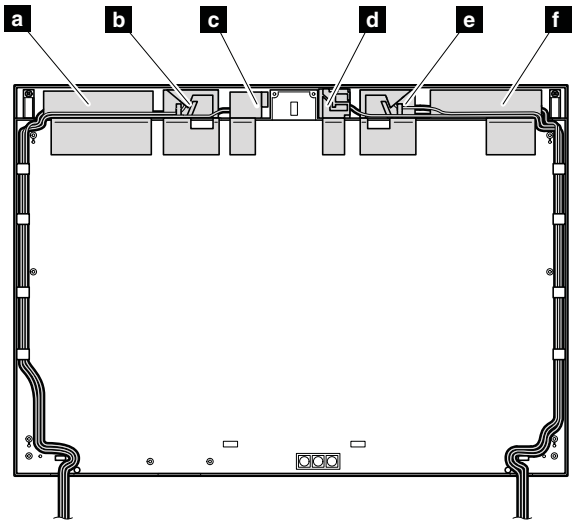

Attention: As you route the antenna cables, make sure that they are not subjected to any tension. Tension could cause the cables to be damaged by the cable guides, or a wire to be broken.

Downloaded from LpManual.com Manuals

Table 36. Removal steps of LCD rear cover and wireless antenna cables for 12.1-in. WXGA+ LCD model

12.1-in. WXGA+ LCD model:

In step 1, release the antenna cables from the cable guides of the rear cover.

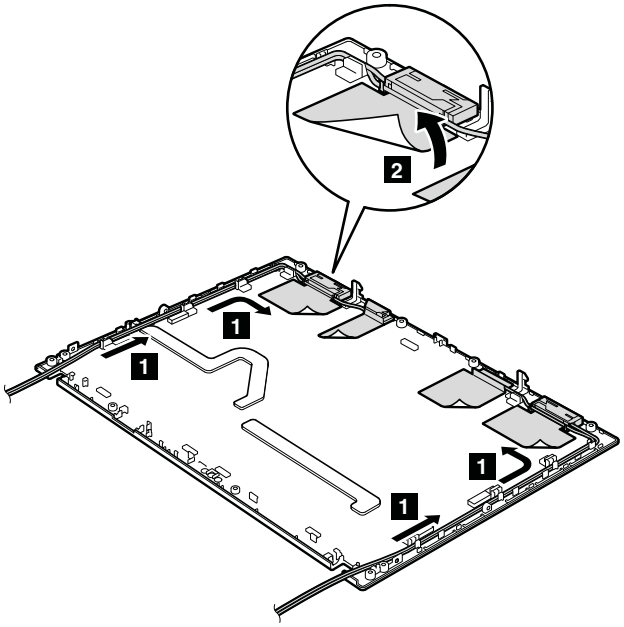

Note: Wireless antennas are secured with double-faced adhesive tapes.

Cable routing: Place the antenna assembly as shown in this figure.

a	Wireless LAN antenna, AUX (black)
b	Wireless USB antenna (yellow)
c	MIMO antenna (white)
d	Wireless LAN antenna, MAIN (gray)

Downloaded from LpManual.com Manuals

Table 36. Removal steps of LCD rear cover and wireless antenna cables for 12.1-in. WXGA+ LCD model (continued)

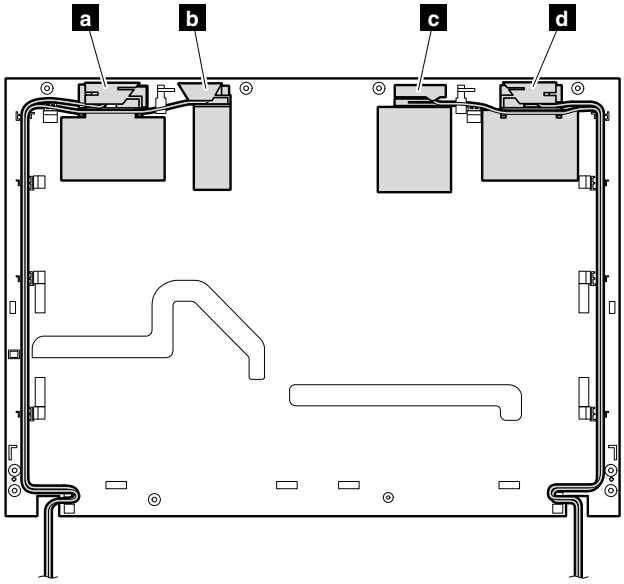

Attention: As you route the antenna cables, make sure that they are not subjected to any tension. Tension could cause the cables to be damaged by the cable guides, or a wire to be broken.

Downloaded from LpManual.com Manuals

Downloaded from LpManual.com Manuals

Chapter 9. Locations

This chapter presents the location of ThinkPad X200, X200s, X200si, X201, X201i, and X201s features and hardware.

Front view

1	ThinkLight
2	Integrated camera (for some models)
3	Status indicators **Note:** For the description of each indicator, see Chapter 5 “Status indicators” on page 59.
4	Power switch
5	Security keyhole
6	Hard disk drive (HDD) or solid-state drive (SSD)
7	RJ-11 (modem) connector
8	Microphone jack
9	Stereo headphone jack
10	Universal serial bus (USB) connector
11	TrackPoint pointing stick
12	Fingerprint reader (for some models)
13	TrackPoint buttons
14	Touch pad buttons (for some models)
15	Touch pad (for some models)
16	UltraNav® (for some models)
17	Volume control buttons
18	ThinkVantage button
19	Built-in microphone

© Copyright Lenovo 2010, 2012

Downloaded from LpManual.com Manuals

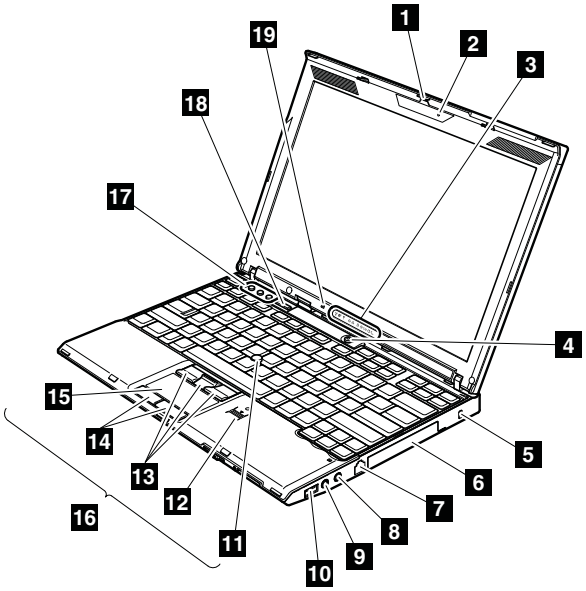

Rear view

1	ExpressCard slot
2	Wireless radio switch
3	Universal Serial Bus (USB) connector
4	RJ-45 (Ethernet) connector
5	External monitor connector
6	Universal serial bus (USB) connector
7	AC power connector
8	Bluetooth antenna (for some models)
9	Status indicators

Note: For the description of each indicator, see Chapter 5 “Status indicators” on page 59.

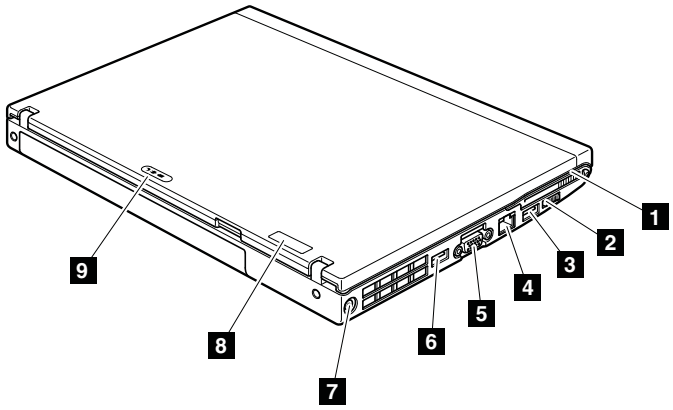

Downloaded from LpManual.com Manuals

Bottom view

1. Battery pack
2. Battery pack latch
3. Docking connector
4. DIMM slots
5. LCD cover latch
6. Built-in speaker
7. 5-in-1 Media Card Reader or 3-in-1 Media Card Reader slot
8. Hard disk drive (HDD) or solid-state drive (SSD)

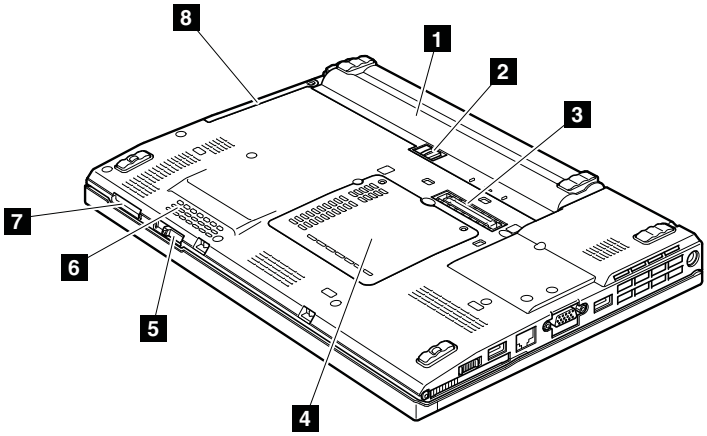

Rear view (ThinkPad X200 UltraBase)

1. AC power connector
2. Universal serial bus (USB) connectors
3. External monitor connector
4. DisplayPort connector
5. Headphone jack
6. Microphone jack
7. RJ-45 (Ethernet) connector
8. Security keyhole
9. Security lock key
10. Universal serial bus (USB) connector
11. Serial Ultrabay Slim device release latch
12. Serial Ultrabay Slim device eject lever
13. Serial Ultrabay Slim device
14. Docking connector

Downloaded from LpManual.com Manuals

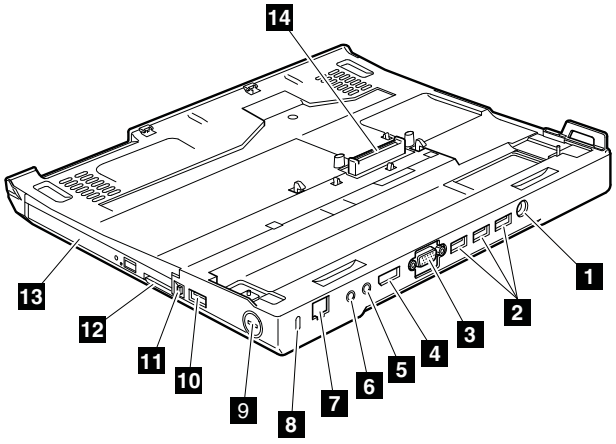

Bottom view (ThinkPad X200 UltraBase)

1	Battery charger (behind the flip-down door)
2	UltraBase eject request button
3	UltraBase eject lever
4	Power button security latch
5	Power button
6	Built-in stereo speakers

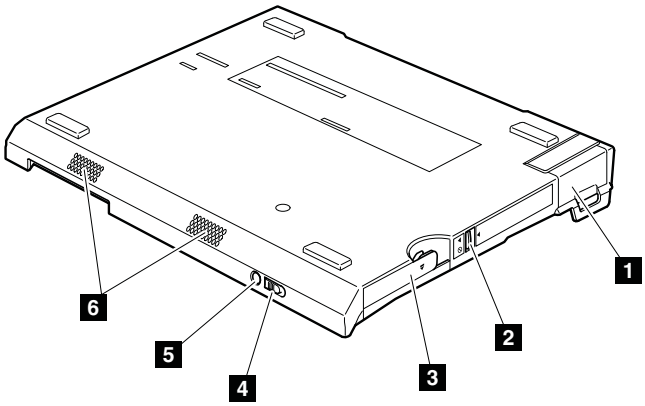

Downloaded from LpManual.com Manuals

Chapter 10. Parts list

This section contains following lists of the service parts.

- “Overall” on page 136
- “LCD FRUs” on page 220
- “Keyboard” on page 246
- “Miscellaneous parts” on page 247
- “AC adapters” on page 247
- “Power cords” on page 248
- “Recovery discs” on page 249
- “Common service tools” on page 267

Notes:

- Each FRU is available for all types or models, unless specific types or models are specified.
- FRU with specific models listed and described as xxU (where U is an example of a country designator) should be used for all models ending in U.
- FRU with specific models listed and described as 3Dx (where 3D is an example of a unique configuration) should be used for all of these models, unless specific country or region designator is specified.
- A CRU (customer replaceable unit) is identified by a single asterisk (*) or two asterisks (**) in the CRU ID column. An N in the CRU ID column means that the part is not a CRU. A single asterisk (*) means that the part is a Self-service CRU; two asterisks (**) means that the part is an Optional-service CRU.ThinkPad computers contain the following types of CRUs:

Self-service CRUs	These CRUs unplug or are held by no more than two screws. Examples of these types of CRUs include an ac adapter, a power cord, a battery, and a hard disk drive. Other Self-service CRUs depending on product design may include a memory, a wireless card, a keyboard, and a palm rest with finger print reader and touchpad.
Optional-service CRUs	These CRUs are isolated parts within the computer that are concealed by an access panel that is typically secured by more than two screws. Once the access panel is removed, the specific CRU is visible.

- FRUs marked with OP are available as options.

External CRU statement to customers:

Some problems with your product can be resolved with a replacement part you can install yourself, called a “Customer Replaceable Unit” or “CRU.” Some CRUs are designated as Self-service CRUs and others are designated as Optional-service CRUs. *Installation of Self-service CRUs is your responsibility; you may request that Lenovo installs an Optional-service CRU according to the warranty service for your product.* Where you are installing the CRU, Lenovo will ship the CRU to you. CRU information and replacement instructions are shipped with your product and are available from Lenovo at any time upon request. You may find a list of CRUs in the publications that ship with your product or at http://www.lenovo.com/CRUs. You may be required to return the defective part that is replaced by the CRU. When return is required: (1) return instructions, a prepaid shipping label, and a container will be included with the replacement CRU; and (2) you may be charged for the replacement CRU if Lenovo does not receive the defective part within thirty (30) days of your receipt of the replacement CRU. See your Lenovo Limited Warranty documentation for full details.

© Copyright Lenovo 2010, 2012

Downloaded from LpManual.com Manuals

Overall

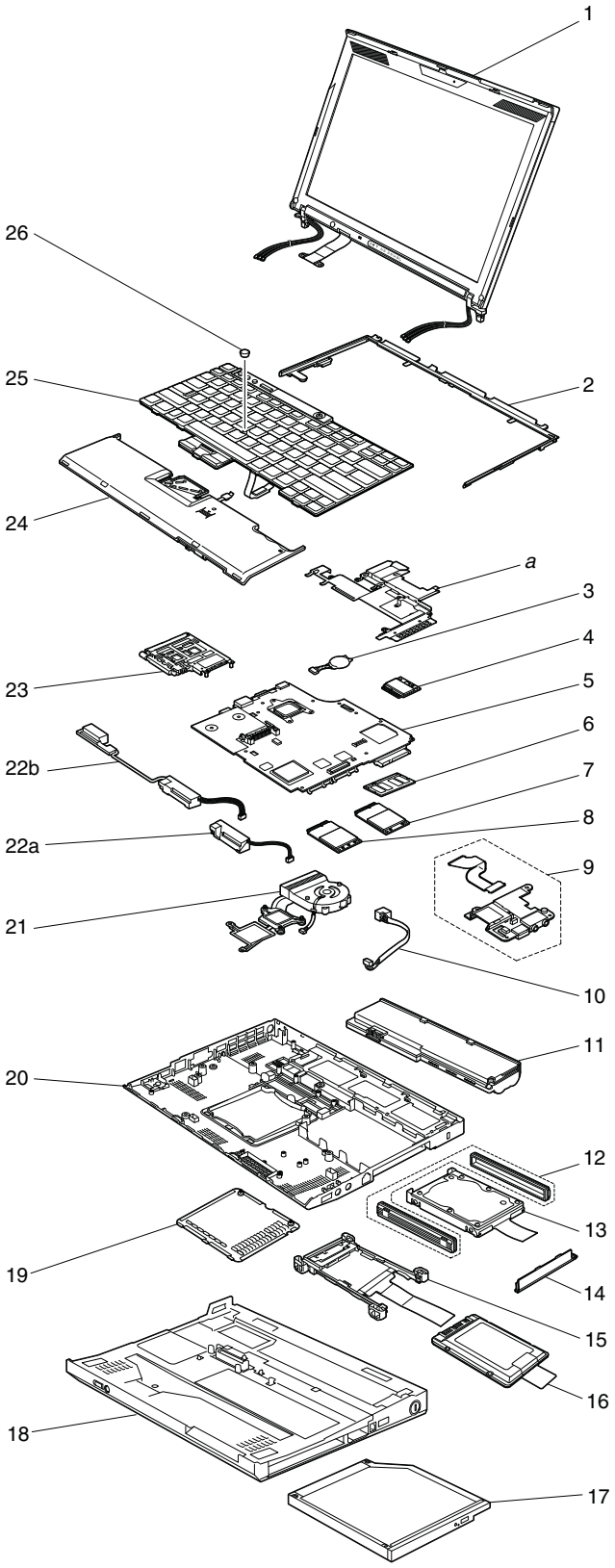

Downloaded from LpManual.com Manuals

Table 37. Parts list—Overall

No.	FRU	FRU no.	CRU ID
a	See “Miscellaneous parts” on page 247.		
1	LCD unit (see “LCD FRUs” on page 220.)		
2	Keyboard bezel assembly	44C9542	N
3	Backup battery	92P1210	N
4	Intel Turbo Memory 2-GB Minicard • 7454-CTO, 23x, 25x, 28x, 2Jx, 2Lx, 2Qx, GEx • 7455-CTO, 33x, 35x, 3Ax, 3Hx, 3Jx, 3Sx, 3Tx, 3Vx, 3Wx, 3Xx, 3Yx, 4Ex, 4Fx, 4Gx, 8Xx, 8Yx, D6x, D7x, D8x, DLx, DMx, FBx, FCx • 7457-CTO, 43x, 44x, 47x, 49x, 4Dx • 7458-CTO, 29x, 2Ax, 2Bx, 2Mx, 2Nx, 2Px, 53x, 54x, 56x, 57x, 58x, 5Ax, 5Bx, 5Cx, 5Dx, 5Lx, 5Mx, 5Sx, 69x, 6Cx, 6Dx, 6Mx, 6Nx, 6Px, 6Qx, 6Rx, 6Tx, 6Vx, 6Yx, 6Zx, 7Bx, 7Dx, 7Jx, 7Kx, 7Zx, 8Cx, 8Fx, 8Wx, 8Xx, 8Yx, F3x, F4x, F7x, FDx, FEx, FFx, FHx, FKx, FLx, FXx, G3x, G6x, G7x, G8x • 7459-CTO, 63x, 64x, 65x, 66x, 68x, 69x, 6Bx, 6Dx, 6Nx, 6Px, 6Qx, 6Tx, 6Ux, 6Vx, 6Xx, H2x • 2023-CTO • 2024-CTO • 7462-CTO, 46x, 47x, 48x, 49x, 4Ax, 4Bx, 4Dx, 4Ex, 4Fx • 7465-CTO, 25x, 26x, 27x, 28x, 29x, 2Ex, 2Fx • 7466-CTO, 34x, 35x, 38x, 39x, 3Ax, 3Fx, 3Gx, 3Rx, 3Sx, 3Tx, 3Ux, 3Vx, 3Wx, 3Zx, 92x, 9Dx, FQx, FSx, FTx, FZx, N2x • 7469-CTO, 54x, 55x, 56x, 57x, 58x, 59x, 5Ax, 5Lx, 5Mx, 5Px, 5Qx, 5Zx, 6Bx, 6Ex, 72x, 73x, 78x, 79x, 7Bx, 7Ux, 8Cx, 8Dx, 8Ex, 8Gx, 8Kx, 8Nx, 8Qx • 7470-CTO, 64x, 65x, 68x, 69x, 6Ax • 2046-CTO • 2047-CTO • 3249-CTO • 3323-CTO • 3357-CTO • 3626-CTO • 3680-CTO • 3712-CTO • 4492-CTO • 5129-CTO • 5143-CTO • 5385-CTO • 5397-CTO • 5413-CTO • 5442-CTO • 5446-CTO	43Y6523	**
4	Intel Turbo Memory 4-GB Minicard • 7454-CTO • 7455-CTO • 7457-CTO • 7458-CTO, 2Cx, 2Tx, 6Ex, F8x, F9x, FJx, FYx, GBx • 7459-CTO • 2023-CTO • 2024-CTO • 7462-CTO • 7465-CTO • 7466-CTO, 5Yx • 7469-CTO, 8Fx, 8Hx, 8Px • 7470-CTO • 2046-CTO • 2047-CTO	43Y6525	**

Downloaded from LpManual.com Manuals

Table 37. Parts list—Overall (continued)

No.	FRU	FRU no.	CRU ID
	• 3249-CTO • 3323-CTO • 3357-CTO • 3626-CTO • 3680-CTO • 3712-CTO • 4492-CTO • 5129-CTO • 5143-CTO • 5385-CTO • 5397-CTO • 5413-CTO • 5442-CTO • 5446-CTO		
4	Wireless USB PCI Express Half-Mini Card • 7454-CTO • 7455-CTO • 7457-CTO • 7458-CTO • 7459-CTO • 2023-CTO • 2024-CTO • 7462-CTO, 44x, 45x, 4Cx • 7465-CTO, 2Dx • 7466-CTO • 7469-CTO • 7470-CTO • 2046-CTO • 2047-CTO		
	US	43Y6501	**
	JP	43Y6503	**
5	System board with Intel Core 2 Duo mobile processor P8400 (2.26 GHz), AMT, TPM • 7454-CTO, 26x, 29x, 2Jx, 2Kx, 2Nx, 2Px, 2Rx, 2Wx, 2Xx, 2Yx, 92x • 7455-CTO, 36x, 38x, 39x, 3Dx, 3Jx, 3Kx, 3Px, 3Sx, 3Tx • 7457-CTO, 45x, 48x, 4Ax, 4Bx, 4Cx, 4Dx, 4Gx, 4Hx, 4Jx, 4Nx, 4Px, 4Qx, 4Ux, 4Vx, 4Wx • 7458-CTO, 55x, 57x, 5Ax, 5Bx, 5Lx, 5Mx, 5Nx, 5Px, 72x, 73x, 78x, 7Ex, 7Fx, 7Gx, 7Hx, 7Lx, 7Mx, 7Nx, 7Px, 7Rx, 7Tx, 7Xx, 7Zx, 82x, 86x, F5x, X5x • 7459-CTO, 62x, 63x, 68x, 6Cx, 6Ex, 6Fx, 6Lx, 6Rx, 6Tx • 2023-CTO • 2024-CTO	60Y3792	N
5	System board with Intel Core 2 Duo mobile processor P8400 (2.26 GHz), AMT, non-TPM • 7454-CTO • 7455-CTO, 3Wx • 7457-CTO • 7458-CTO, 7Vx, 7Wx, 8Cx, 8Dx, 8Hx, 8Kx, 8Lx, 8Nx • 7459-CTO • 2023-CTO • 2024-CTO	60Y3795	N

Downloaded from LpManual.com Manuals

Table 37. Parts list—Overall (continued)

No.	FRU	FRU no.	CRU ID
5	System board with Intel Core 2 Duo mobile processor P8400 (2.26 GHz), non-AMT, TPM • 7454-CTO • 7455-CTO • 7457-CTO • 7458-CTO • 7459-CTO • 2023-CTO • 2024-CTO	60Y3786	N
5	System board with Intel Core 2 Duo mobile processor P8400 (2.26 GHz), non-AMT, non-TPM • 7454-CTO • 7455-CTO • 7457-CTO • 7458-CTO • 7459-CTO • 2023-CTO • 2024-CTO	60Y3789	N
5	System board with Intel Core 2 Duo mobile processor P8600 (2.4 GHz), AMT, TPM • 7454-CTO, 3Yx, 3Zx, G2x, G3x, G4x, G5x, G6x, G7x, G8x, G9x, GFx, GGx, GHx, GJx, GKx, GLx, GMx, GPx • 7455-CTO, 3Mx, 3Xx, 3Yx, 85x, 86x, 87x, 88x, 89x, 8Ax, 8Bx, 8Cx, 8Dx, 8Ex, 8Jx, 8Tx, 8Ux, 8Vx, 8Wx, FTx, FUx, FVx, FWx, FXx, FYx, P9x, PGx, PHx, PJx • 7457-CTO, 42x, 43x, 44x, 46x, 47x, 49x, 4Ex, 4Fx, 4Kx, 4Lx, 4Mx • 7458-CTO, 52x, 53x, 54x, 56x, 58x, 59x, 5Cx, 5Dx, 5Ex, 5Fx, 5Hx, 5Jx, 5Qx, 5Rx, 5Sx, 5Tx, 69x, 74x, 76x, 77x, 79x, 7Bx, 7Cx, 7Dx, 7Jx, 7Kx, 7Qx, 7Sx, 7Ux, 7Yx, 83x, 84x, 85x, 87x, 88x, 89x, 8Ax, 8Px, 8Qx, 8Rx, 8Sx, 8Zx, E2x, F2x, F6x, F7x, F8x, FDx, FMx, FNx, FPx, FQx, FSx, FTx, M2x, M3x, X4x • 7459-CTO, 5Ex, 5Fx, 64x, 65x, 66x, 67x, 69x, 6Ax, 6Bx, 6Dx, 6Gx, 6Jx, 6Kx, 6Mx, 6Nx, 6Px, 6Qx, 6Sx, 6Ux, 6Vx, 6Wx, 6Xx, E3x, H3x, M2x, M3x, M4x • 2023-CTO • 2024-CTO	60Y3793	N
5	System board with Intel Core 2 Duo mobile processor P8600 (2.4 GHz), AMT, non-TPM • 7454-CTO • 7455-CTO • 7457-CTO • 7458-CTO, 8Bx, 8Ex, 8Fx, 8Gx, 8Jx, 8Mx • 7459-CTO, 6Yx, 6Zx, H2x • 2023-CTO • 2024-CTO	60Y3796	N
5	**Notes:** When you replace the system board listed below, be sure that the new one has the same ROM size as the original one. • To identify the system board originally installed in your computer, go to PEW at the following web site: http://www.lenovo.com/support/site.wss/document.do?lndocid=LOOK-WARNTY Select Warranty Lookup. Input the machine type and the serial number. Use the system board listed on PEW.		
	System board with Intel Core 2 Duo mobile processor P8600 (2.4 GHz), non-AMT, TPM, 8-MB ROM • 7454-CTO, 22x, 23x, 24x, 25x, 27x, 28x, 2Gx, 2Hx, 2Jx, 2Mx, 2Qx, 2Sx, 2Tx, 2Ux, 2Vx, 2Zx, 3Tx, 93x, 95x, 96x, 97x, 98x, 9Fx, 9Gx, 9Hx, 9Lx, GBx, GCx, GDx, GEx, GNx • 7455-CTO, 32x, 33x, 34x, 35x, 3Ax, 3Bx, 3Cx, 3Ex, 3Fx, 3Gx, 3Hx, 3Lx, 3Nx, 3Qx, 3Rx, 3Zx, 4Wx, 82x, 83x, 8Gx, 8Kx, 8Lx, 8Mx, 8Nx, 8Px, 8Qx, 8Rx, 8Sx, 8Zx, D5x, D9x, DCx, DPx, DQx, FRx, FSx, FZx, N3x, N4x, N5x, P2x, P3x, P4x, P5x, P6x, P7x, PAx, PBx, PCx • 7457-CTO • 7458-CTO • 7459-CTO, 73x • 2023-CTO • 2024-CTO	60Y3787	N

Downloaded from LpManual.com Manuals

Table 37. Parts list—Overall (continued)

No.	FRU	FRU no.	CRU ID
5	**Notes:** When you replace the system board listed below, be sure that the new one has the same ROM size as the original one. • To identify the system board originally installed in your computer, go to PEW at the following web site:http://www.lenovo.com/support/site.wss/document.do?lndocid=LOOK-WARNTY Select Warranty Lookup. Input the machine type and the serial number. Use the system board listed on PEW.		
	System board with Intel Core 2 Duo mobile processor P8600 (2.4 GHz), non-AMT, TPM, 4-MB ROM • 7454-CTO, 22x, 23x, 24x, 25x, 27x, 28x, 2Gx, 2Hx, 2Jx, 2Mx, 2Qx, 2Sx, 2Tx, 2Ux, 2Vx, 2Zx, 3Tx, 93x, 95x, 96x, 97x, 98x, 9Fx, 9Gx, 9Hx, 9Lx, GBx, GCx, GDx, GEx, GNx • 7455-CTO, 32x, 33x, 34x, 35x, 3Ax, 3Bx, 3Cx, 3Ex, 3Fx, 3Gx, 3Hx, 3Lx, 3Nx, 3Qx, 3Rx, 3Zx, 4Wx, 82x, 83x, 8Gx, 8Kx, 8Lx, 8Mx, 8Nx, 8Px, 8Qx, 8Rx, 8Sx, 8Zx, D5x, D9x, DCx, DPx, DQx, FRx, FSx, FZx, N3x, N4x, N5x, P2x, P3x, P4x, P5x, P6x, P7x, PAx, PBx, PCx • 7457-CTO • 7458-CTO • 7459-CTO, 73x • 2023-CTO • 2024-CTO	60Y3839	N
5	**Notes:** When you replace the system board listed below, be sure that the new one has the same ROM size as the original one. • To identify the system board originally installed in your computer, go to PEW at the following web site: http://www.lenovo.com/support/site.wss/document.do?lndocid=LOOK-WARNTY Select Warranty Lookup. Input the machine type and the serial number. Use the system board listed on PEW.		
	System board with Intel Core 2 Duo mobile processor P8600 (2.4 GHz), non-AMT, non-TPM, 8-MB ROM • 7454-CTO • 7455-CTO, 3Ux, 3Vx, 84x, DAx, DEx, DGx, DHx, F3x, PDx, PEx, PFx • 7457-CTO • 7458-CTO • 7459-CTO • 2023-CTO • 2024-CTO	60Y3790	N
5	**Notes:** When you replace the system board listed below, be sure that the new one has the same ROM size as the original one. • To identify the system board originally installed in your computer, go to PEW at the following web site: http://www.lenovo.com/support/site.wss/document.do?lndocid=LOOK-WARNTY Select Warranty Lookup. Input the machine type and the serial number. Use the system board listed on PEW.		
	System board with Intel Core 2 Duo mobile processor P8600 (2.4 GHz), non-AMT, non-TPM, 4-MB ROM • 7454-CTO • 7455-CTO, 3Ux, 3Vx, 84x, DAx, DEx, DGx, DHx, F3x, PDx, PEx, PFx • 7457-CTO • 7458-CTO • 7459-CTO • 2023-CTO • 2024-CTO	60Y3840	N

Downloaded from LpManual.com Manuals

Table 37. Parts list—Overall (continued)

No.	FRU	FRU no.	CRU ID
5	System board with Intel Core 2 Duo mobile processor P8700 (2.53 GHz), AMT, TPM • 7454-CTO • 7455-CTO, 4Cx, 4Dx, 4Kx, 4Lx, 4Mx, 4Tx, FHx, FQx • 7457-CTO, 4Rx, 4Sx, 4Tx, 53x, 54x, 56x, 57x, 58x • 7458-CTO, 24x, 25x, 26x, 27x, 28x, 29x, 2Kx, 2Lx, 4Xx, 4Yx, 66x, 6Bx, 6Kx, 6Lx, 6Nx, 6Px, 6Qx, 6Rx, 6Vx, 6Xx, 8Tx, 8Wx, 8Xx, F3x, F4x, F9x, FAx, FCx, FEx, FFx, FGx, FHx, FJx, FKx, FLx, FUx, FVx, FWx, G5x, G6x, GBx, GCx • 7459-CTO, H4x, H6x, H7x • 2023-CTO • 2024-CTO	60Y3825	N
5	System board with Intel Core 2 Duo mobile processor P8700 (2.53 GHz), AMT, non-TPM • 7454-CTO • 7455-CTO, D6x • 7457-CTO • 7458-CTO, 8Yx • 7459-CTO • 2023-CTO • 2024-CTO	60Y3827	N
5	System board with Intel Core 2 Duo mobile processor P8700 (2.53 GHz), non-AMT, TPM • 7454-CTO, 32x, 33x, 34x, 36x, 38x, 3Px, 3Rx, 3Vx, 3Wx, 3Xx, 9Bx, 9Cx, 9Jx • 7455-CTO, 42x, 43x, 44x, 49x, 4Bx, 4Xx, 4Zx, D2x, D3x, D7x, D8x, DDx, DJx, DKx, DLx, DMx, DNx, DRx, DSx, DTx, DXx, F5x, F6x, FEx, FJx, FMx • 7457-CTO, 52x, 55x • 7458-CTO, 62x, 65x, 6Jx • 7459-CTO, 74x • 2023-CTO • 2024-CTO	60Y3841	N
5	System board with Intel Core 2 Duo mobile processor P8700 (2.53 GHz), non-AMT, non-TPM • 7454-CTO, 3Hx, 3Jx, 3Kx, 3Lx, 3Mx, 3Nx • 7455-CTO, 47x, DBx, DFx, F4x, FNx, FPx • 7457-CTO • 7458-CTO • 7459-CTO • 2023-CTO • 2024-CTO	60Y3842	N
5	System board with Intel Core 2 Duo mobile processor P8800 (2.4 GHz), AMT, TPM • 7454-CTO, 3Qx, 3Sx • 7455-CTO, 45x, 46x, 4Ax, 4Ex, 4Fx, 4Gx, 4Hx, 4Jx, 4Nx, 4Px, 4Qx, 4Rx, 4Sx, 4Ux, 4Vx, 4Yx, 8Fx, 8Hx, 8Xx, 8Yx, DUx, DVx, DYx, DZx, F2x, F7x, F9x, FDx, FFx, FGx, FKx, FLx, N2x • 7457-CTO • 7458-CTO, 22x, 2Ax, 2Bx, 2Cx, 2Dx, 2Ex, 2Fx, 2Mx, 2Nx, 2Px, 2Qx, 2Rx, 2Sx, 2Tx, 2Vx, 63x, 64x, 67x, 68x, 6Ax, 6Cx, 6Dx, 6Ex, 6Mx, 6Sx, 6Tx, 6Ux, 6Wx, 6Yx, 6Zx, FXx, FYx, G3x, G4x, G7x, G8x, G9x, GDx, GEx, GFx • 7459-CTO, 72x, 75x, H5x • 2023-CTO • 2024-CTO	43Y9982	N
5	System board with Intel Core 2 Duo mobile processor P8800 (2.4 GHz), AMT, non-TPM • 7454-CTO • 7455-CTO, 48x, DWx • 7457-CTO • 7458-CTO • 7459-CTO • 2023-CTO • 2024-CTO	43Y9984	N

Downloaded from LpManual.com Manuals

Table 37. Parts list—Overall (continued)

No.	FRU	FRU no.	CRU ID
5	System board with Intel Core 2 Duo mobile processor P8800 (2.4 GHz), non-AMT, TPM • 7454-CTO • 7455-CTO • 7457-CTO • 7458-CTO • 7459-CTO • 2023-CTO • 2024-CTO	45M2839	N
5	System board with Intel Core 2 Duo mobile processor P8800 (2.4 GHz), non-AMT, non-TPM • 7454-CTO • 7455-CTO • 7454-CTO • 7455-CTO • 7457-CTO • 7458-CTO • 7459-CTO • 2023-CTO • 2024-CTO	45M2840	N
5	System board with Intel Core 2 Duo mobile processor T9400 (2.53 GHz), AMT, TPM • 7454-CTO • 7455-CTO • 7457-CTO • 7458-CTO • 7459-CTO • 2023-CTO • 2024-CTO	60Y3794	N
5	System board with Intel Core 2 Duo mobile processor T9400 (2.53 GHz), AMT, non-TPM • 7454-CTO • 7455-CTO • 7457-CTO • 7458-CTO • 7459-CTO • 2023-CTO • 2024-CTO	60Y3797	N
5	System board with Intel Core 2 Duo mobile processor T9400 (2.53 GHz), non-AMT, TPM • 7454-CTO • 7455-CTO • 7457-CTO • 7458-CTO • 7459-CTO • 2023-CTO • 2024-CTO	60Y3788	N
5	System board with Intel Core 2 Duo mobile processor T9400 (2.53 GHz), non-AMT, non-TPM • 7454-CTO • 7455-CTO • 7457-CTO • 7458-CTO • 7459-CTO • 2023-CTO • 2024-CTO	60Y3791	N

Downloaded from LpManual.com Manuals

Table 37. Parts list—Overall (continued)

No.	FRU	FRU no.	CRU ID
5	System board with Intel Core 2 Duo mobile processor T9550 (2.66 GHz), AMT, TPM • 7454-CTO • 7455-CTO • 7457-CTO • 7458-CTO • 7459-CTO • 2023-CTO • 2024-CTO	60Y3826	N
5	System board with Intel Core 2 Duo mobile processor T9550 (2.66 GHz), AMT, non-TPM • 7454-CTO • 7455-CTO • 7457-CTO • 7458-CTO • 7459-CTO • 2023-CTO • 2024-CTO	60Y3828	N
5	System board with Intel Core 2 Duo mobile processor T9600 (2.8 GHz), AMT, TPM • 7454-CTO • 7455-CTO • 7457-CTO • 7458-CTO • 7459-CTO • 2023-CTO • 2024-CTO	43Y9983	N
5	System board with Intel Core 2 Duo mobile processor T9600 (2.8 GHz), AMT, non-TPM • 7454-CTO • 7455-CTO • 7457-CTO • 7458-CTO • 7459-CTO • 2023-CTO • 2024-CTO	43Y9985	N
5	System board with Intel Core 2 Duo mobile processor SU9300 (1.2 GHz), AMT, TPM • 7462-CTO, 4Dx, 4Gx • 7465-CTO, 2Ex, 2Hx • 7466-CTO, 38x, 3Bx • 7469-CTO, 58x, 5Bx • 7470-CTO, 68x, 6Bx • 2046-CTO • 2047-CTO	60Y3847	N
5	System board with Intel Core 2 Duo mobile processor SU9300 (1.2 GHz), AMT, non-TPM • 7462-CTO • 7465-CTO • 7466-CTO • 7469-CTO • 7470-CTO • 2046-CTO • 2047-CTO	60Y3850	N

Downloaded from LpManual.com Manuals

Table 37. Parts list—Overall (continued)

No.	FRU	FRU no.	CRU ID
5	System board with Intel Core 2 Duo mobile processor SU9400 (1.4 GHz), AMT, TPM • 7462-CTO • 7465-CTO, 3Mx • 7466-CTO, 4Kx, 4Lx, 4Mx, 58x • 7469-CTO, 65x, 66x • 7470-CTO • 2046-CTO • 2047-CTO	60Y3867	N
5	System board with Intel Core 2 Duo mobile processor SU9400 (1.4 GHz), AMT, non-TPM • 7462-CTO • 7465-CTO, 3Lx • 7466-CTO, 46x • 7469-CTO • 7470-CTO • 2046-CTO • 2047-CTO	60Y3870	N
5	System board with Intel Core 2 Duo mobile processor SU9600 (1.6 GHz), AMT, TPM • 7462-CTO • 7465-CTO, 3Kx • 7466-CTO, 9Gx • 7469-CTO, 6Px • 7470-CTO • 2046-CTO • 2047-CTO	60Y3868	N
5	System board with Intel Core 2 Duo mobile processor SU9600 (1.6 GHz), AMT, non-TPM • 7462-CTO • 7465-CTO • 7466-CTO • 7469-CTO • 7470-CTO • 2046-CTO • 2047-CTO	60Y3871	N
5	System board with Intel Core 2 Duo mobile processor SL9300 (1.6 GHz), AMT, TPM • 7462-CTO, 42x, 43x, 44x, 45x, 46x, 4Ex, 4Hx, 4Kx, 4Lx, 4Nx, 4Qx, 4Sx • 7465-CTO, 23x, 24x, 25x, 26x, 27x, 2Fx, 2Jx, 2Mx, 2Px, 2Rx, 2Tx, 2Vx, 2Wx, 2Xx • 7466-CTO, 32x, 33x, 34x, 39x, 3Cx, 3Kx, 3Lx, 3Mx, 3Nx, 3Px, 3Qx, 3Xx, 3Yx, 9Vx, 9Wx, 9Xx • 7469-CTO, 52x, 53x, 54x, 56x, 59x, 5Cx, 5Ex, 5Lx, 5Mx, 5Nx, 5Px, 5Xx, 5Yx, 5Zx, 72x, 75x, 78x, 7Ax, 7Dx, 7Ex, 7Gx, 7Hx, 7Jx, 7Kx, 7Yx, 7Zx, 82x, 8Ax, 8Bx • 7470-CTO, 62x, 63x, 64x, 69x, 6Cx • 2046-CTO • 2047-CTO	60Y3848	N
5	System board with Intel Core 2 Duo mobile processor SL9300 (1.6 GHz), AMT, non-TPM • 7462-CTO • 7465-CTO • 7466-CTO • 7469-CTO, 7Qx • 7470-CTO • 2046-CTO • 2047-CTO	60Y3851	N

Downloaded from LpManual.com Manuals

Table 37. Parts list—Overall (continued)

No.	FRU	FRU no.	CRU ID
5	System board with Intel Core 2 Duo mobile processor SL9400 (1.86 GHz), AMT, TPM • 7462-CTO, 47x, 48x, 49x, 4Ax, 4Bx, 4Cx, 4Fx, 4Jx, 4Mx, 4Px, 4Rx, 4Tx, F2x, F3x • 7465-CTO, 28x, 29x, 2Dx, 2Kx, 2Lx, 2Nx, 2Qx, 2Sx, 2Ux, 2Zx, 3Jx • 7466-CTO, 35x, 3Ax, 3Dx, 3Ex, 3Fx, 3Gx, 3Hx, 3Jx, 3Rx, 3Sx, 45x, 4Nx, 4Px, 4Qx, 4Rx, 4Sx, 4Tx, 4Ux, 54x, 56x, 5Hx, 93x, 94x, 96x, 97x, 98x, 99x, 9Ax • 7469-CTO, 55x, 57x, 5Ax, 5Dx, 5Gx, 5Hx, 5Jx, 5Kx, 5Qx, 5Rx, 5Sx, 5Tx, 5Ux, 5Vx, 5Wx, 67x, 68x, 69x, 6Ax, 6Cx, 6Dx, 6Hx, 6Kx, 6Lx, 6Mx, 6Nx, 6Tx, 6Ux, 6Vx, 6Wx, 73x, 74x, 76x, 77x, 79x, 7Bx, 7Cx, 7Fx, 86x, 89x, 8Lx, 8Mx, 8Tx, 95x, 9Ex, 9Gx, GCx • 7470-CTO, 5Gx, 5Hx, 65x, 6Ax, 6Dx, 6Ex, 6Fx, 6Gx, 6Hx, 6Lx, 72x, 74x, 8Tx • 2046-CTO • 2047-CTO	60Y3849	N
5	System board with Intel Core 2 Duo mobile processor SL9400 (1.86 GHz), AMT, non-TPM • 7462-CTO • 7465-CTO • 7466-CTO, 3Tx, 3Ux, 3Zx, 5Bx, 5Cx, 5Dx, 5Ex, 5Yx, 92x, 9Ex, 9Fx, HDx, HEx • 7469-CTO, 5Fx, 7Lx, 7Mx, 7Nx, 7Px, 7Rx, 7Sx, 7Tx, 7Ux, 7Vx, 7Xx, 8Gx, GBx • 7470-CTO, 6Jx, 6Kx • 2046-CTO • 2047-CTO	60Y3852	N
5	System board with Intel Core 2 Duo mobile processor SL9600 (2.13 GHz), AMT, TPM • 7462-CTO, 4Zx • 7465-CTO, 2Yx, D2x, D3x • 7466-CTO, 3Vx, 3Wx, 43x, 44x, 55x, 5Xx, 9Bx, 9Cx, 9Dx, DMx • 7469-CTO, 6Bx, 6Ex, 6Fx, 6Gx, 6Jx, 6Px, 6Qx, 6Rx, 6Xx, 6Yx, 6Zx, 87x, 88x, 8Cx, 8Dx, 8Ex, 8Fx, 8Kx, 8Nx, 8Px, 8Rx, 8Sx, 96x, 9Dx, GAx • 7470-CTO, 75x • 2046-CTO • 2047-CTO	60Y3869	N
5	System board with Intel Core 2 Duo mobile processor SL9600 (2.13 GHz), AMT, non-TPM • 7462-CTO • 7465-CTO • 7466-CTO, 4Wx, 4Xx, FZx, N2x • 7469-CTO, 8Hx, 8Jx, 8Qx, 98x, 99x • 7470-CTO • 2046-CTO • 2047-CTO	60Y3872	N
5	System board with Intel Core™ 2 Solo mobile processor SU3500 (1.4 GHz), AMT, TPM • 7462-CTO, 24x, 25x, 26x, 29x, 2Ax, 2Bx, 2Gx, 2Hx, FBx, FCx, FDx, FEx, FFx, FGx, FLx, FMx, FNx, FPx, FQx, FRx, FUx, FVx • 7465-CTO, 3Vx • 7466-CTO, 4Ex, 4Fx, 4Yx, 4Zx, 52x, 53x, 57x, 5Gx, 5Zx, 9Kx, 9Lx, 9Mx, 9Nx, 9Rx, 9Sx, 9Tx, 9Ux, H2x, H3x, H4x • 7469-CTO, 93x, 94x, G2x, G3x, G4x, G5x, G6x • 7470-CTO, 6Qx, 6Rx, 73x • 2046-CTO • 2047-CTO	60Y5691	N
5	System board with Intel Core 2 Solo mobile processor SU3500 (1.4 GHz), AMT, non-TPM • 7462-CTO • 7465-CTO, D6x, D7x, D8x, D9x, DAx, 3Ux • 7466-CTO, 59x, 5Ax, 9Px, 9Qx, 9Yx, 9Zx, HCx • 7469-CTO • 7470-CTO • 2046-CTO • 2047-CTO	60Y5692	N

Downloaded from LpManual.com Manuals

Table 37. Parts list—Overall (continued)

No.	FRU	FRU no.	CRU ID
5	System board with Intel Core 2 Solo mobile processor SU3500 (1.4 GHz), non-AMT, TPM • 7462-CTO • 7465-CTO • 7466-CTO • 7469-CTO • 7470-CTO • 2046-CTO • 2047-CTO	45M2841	N
5	System board with Intel Core 2 Solo mobile processor SU3500 (1.4 GHz), non-AMT, non-TPM • 7462-CTO • 7465-CTO • 7466-CTO • 7469-CTO • 7470-CTO • 2046-CTO • 2047-CTO	45M2842	N
5	System board with Intel Celeron® M processor 723 (1.2 GHz), AMT, TPM • 7462-CTO, 22x, 23x, 27x, 28x, 4Ux, 4Vx, 4Wx, 4Xx, 4Yx, F4x, F5x, F6x, F7x, F8x, F9x, FAx • 7465-CTO, 3Nx, 3Px, 3Rx, 3Wx, DFx, G5x, G6x • 7466-CTO, 47x, 48x, 49x, 4Ax, 4Bx, 4Cx, 4Dx, 4Hx, 4Jx, 5Wx, 9Jx, DLx • 7469-CTO, 62x, 63x, 64x, 83x, 84x, 85x, 8Ux, 8Vx, 8Wx, 8Xx, 8Yx, 8Zx, 9Cx, E2x, G9x • 7470-CTO, 6Mx, 6Nx, 8Ux, 8Zx, E2x • 2046-CTO • 2047-CTO	60Y5689	N
5	System board with Intel Celeron M processor 723 (1.2 GHz), AMT, non-TPM • 7462-CTO, FHx, FJx, FKx • 7465-CTO, D4x, DBx, DCx, DDx, DEx • 7466-CTO, 4Vx, 95x, 9Hx • 7469-CTO, 97x • 7470-CTO • 2046-CTO • 2047-CTO	60Y5690	N
5	System board with Intel Celeron M processor 723 (1.2 GHz), non-AMT, TPM • 7462-CTO • 7465-CTO • 7466-CTO • 7469-CTO • 7470-CTO • 2046-CTO • 2047-CTO	45M2848	N
5	System board with Intel Celeron M processor 723 (1.2 GHz), non-AMT, non-TPM • 7462-CTO • 7465-CTO • 7466-CTO • 7469-CTO • 7470-CTO • 2046-CTO • 2047-CTO	45M2849	N

Downloaded from LpManual.com Manuals

Table 37. Parts list—Overall (continued)

No.	FRU	FRU no.	CRU ID
5	System board with Intel Celeron M processor 743 (1.3 GHz), non-AMT, TPM • 7462-CTO • 7465-CTO • 7466-CTO • 7469-CTO • 7470-CTO • 2046-CTO • 2047-CTO	63Y2034	N
5	System board with Intel Celeron M processor 743 (1.3 GHz), non-AMT, non-TPM • 7462-CTO • 7465-CTO • 7466-CTO • 7469-CTO • 7470-CTO • 2046-CTO • 2047-CTO	63Y2035	N
5	System board with Intel Celeron processor SU2300 (1.2 GHz), non-AMT, TPM • 7462-CTO, 2Cx, 2Dx, 2Ex, 2Fx, FSx, FTx • 7465-CTO, G7x, G8x, G9x • 7466-CTO, 5Fx, 5Jx, 5Kx, 5Lx, 5Mx, 5Nx, 5Px, 5Qx, 5Rx, 5Sx, 5Tx, 5Ux, H5x, H6x, H7x, H8x, H9x • 7469-CTO, 9Ax, 9Bx, G7x, G8x • 7470-CTO, 6Sx, 6Tx, 6Ux, 6Vx, 76x, 77x • 2046-CTO • 2047-CTO	63Y2036	N
5	System board with Intel Celeron processor SU2300 (1.2 GHz), non-AMT, non-TPM • 7462-CTO • 7465-CTO, 3Sx, 3Tx, DGx, DHx, DJx, DKx • 7466-CTO, 5Vx, HAx, HBx • 7469-CTO • 7470-CTO • 2046-CTO • 2047-CTO	63Y2037	N
5	System board with Intel Core 2 Duo processor SU7300 (1.3 GHz), non-AMT, TPM • 7462-CTO • 7465-CTO, 3Xx, 3Yx, 3Zx, G2x, G3x, G4x, GAx, GBx • 7466-CTO, F2x, F3x, F4x, F5x, F6x, F7x, F8x, FBx, FCx, FDx, FEx, FFx, FGx, FHx, FJx, FKx, FLx, FMx, FNx, FPx, FQx, FRx, FSx, FTx, FUx, FVx, FWx • 7469-CTO • 7470-CTO • 2046-CTO • 2047-CTO	63Y2110	N
5	System board with Intel Core 2 Duo processor SU7300 (1.3 GHz), non-AMT, non-TPM • 7462-CTO • 7465-CTO • 7466-CTO, F9x, FAx, FXx, FYx • 7469-CTO • 7470-CTO • 2046-CTO • 2047-CTO	63Y2111	N

Downloaded from LpManual.com Manuals

Table 37. Parts list—Overall (continued)

No.	FRU	FRU no.	CRU ID
5	System board with Intel Pentium processor SU4100 (1.3 GHz), non-AMT, TPM • 7462-CTO • 7465-CTO • 7466-CTO • 7469-CTO • 7470-CTO • 2046-CTO • 2047-CTO	63Y2112	N
5	System board with Intel Pentium processor SU4100 (1.3 GHz), non-AMT, non-TPM • 7462-CTO • 7465-CTO • 7466-CTO • 7469-CTO • 7470-CTO • 2046-CTO • 2047-CTO	63Y2113	N
5	System board with Intel Core i3-330M processor, NV, AMT, TPM • 3249-CTO • 3323-CTO • 3357-CTO • 3626-CTO • 3680-CTO • 3712-CTO • 4492-CTO	75Y4027	N
5	System board with Intel Core i3-330M processor, NV, AMT, non-TPM • 3249-CTO • 3323-CTO • 3357-CTO • 3626-CTO • 3680-CTO • 3712-CTO • 4492-CTO	75Y4028	N
5	System board with Intel Core i3-330M processor, NV, non-AMT, TPM • 3249-CTO, 3Ux, 3Vx, J2x, JQx, JRx, JSx, MCx, NRx, NSx, NTx, Nux • 3323-CTO, C9x, K2x, KAx, KCx, KDx, KJx, KLx, KPx, KRx, KWx, KYx, KZx, L2x, L7x, LAx, LDx, LEx, LFx, M2x, M3x, M5x, M7x, M8x, M9x, N6x, N7x, N8x, NBx, NCx, NDx, NHx, NNx, NWx, NYx • 3357-CTO • 3626-CTO • 3680-CTO • 3712-CTO • 4492-CTO	63Y2160	N
5	System board with Intel Core i3-330M processor, NV, non-AMT, non-TPM • 3249-CTO, 35x, 36x, J3x, J4x, J6x, J7x, JAx, JFx, JGx, JHx, JJx, NVx • 3323-CTO, JVx, JWx, Jx, JYx, K5x, K6x, K7x, K8x, KVx, NEx, NFx, NKx • 3357-CTO • 3626-CTO • 3680-CTO • 3712-CTO • 4492-CTO	63Y2161	N

Downloaded from LpManual.com Manuals

Table 37. Parts list—Overall (continued)

No.	FRU	FRU no.	CRU ID
5	System board with Intel Core i3-350M processor, NV, non-AMT, TPM • 3249-CTO, 3Dx, 3Ex, 3Fx, 3Gx, 3Hx, 3Jx, CKx, CRx, CSx, MRx • 3323-CTO, AGx, AHx, AMx, ANx, APx, AZx, B2x, B3x, BYx, BZx, E7x, EAx, EEx, EFx, EGx, EHx, EJx, EKx • 3357-CTO • 3626-CTO • 3680-CTO • 3712-CTO • 4492-CTO	63Y2162	N
5	System board with Intel Core i3-350M processor, NV, non-AMT, non-TPM • 3249-CTO • 3323-CTO, BBx • 3357-CTO • 3626-CTO • 3680-CTO • 3712-CTO • 4492-CTO	63Y2163	N
5	System board with Intel Core i3-370M processor, NV, non-AMT, TPM • 3249-CTO, CBx, CCx, CDx, CEx, CFx, CGx, CHx, CLx, CTx, CUx, MDx, MGx, MHx, MJx, MKx • 3323-CTO, BEx, BFx, BGx, BHx, BJx, BKx, BLx, BMx, BNx, BPx, BRx, BSx, BTx, BUx, BVx, BXx, CXx, CYx, CZx, E2x, E3x, E4x, E6x, E8x, EBx, MEx, RRx • 3357-CTO, LMx, LNx • 3626-CTO, 18x • 3680-CTO • 3712-CTO • 4492-CTO	75Y4195	N
5	System board with Intel Core i3-370M processor, NV, non-AMT, non-TPM • 3249-CTO • 3323-CTO • 3357-CTO • 3626-CTO • 3680-CTO • 3712-CTO • 4492-CTO	75Y4196	N
5	System board with Intel Core i3-380M processor, NV, non-AMT, TPM • 3249-CTO, 1Bx, 1Cx, 1Dx, 1Ex, 3Xx, DCx, DDx, ESx, QLx, QRx, • 3323-CTO, DPx, DRx, DSx, EUx, EVx, EWx, LXx, LYx • 3357-CTO • 3626-CTO, 19x • 3680-CTO • 3712-CTO • 4492-CTO	04W0296	N
5	System board with Intel Core i3-380M processor, NV, non-AMT, non-TPM • 3249-CTO, QNx, QPx • 3323-CTO • 3357-CTO • 3626-CTO • 3680-CTO • 3712-CTO • 4492-CTO	04W0297	N

Downloaded from LpManual.com Manuals

Table 37. Parts list—Overall (continued)

No.	FRU	FRU no.	CRU ID
5	System board with Intel Core i3-390M processor, NV, SMB, TPM • 3249-CTO, 1Ax, 1Hx, 1Jx, Q9x, QAx, QDx • 3323-CTO, 1Wx, 1Xx, 1Yx, 1Zx, QWx, QZx • 3357-CTO • 3626-CTO, QTx • 3680-CTO • 3712-CTO • 4492-CTO	04W0454	N
5	System board with Intel Core i3-390M processor, NV, SMB, non-TPM • 3249-CTO • 3323-CTO, 1Tx • 3357-CTO • 3626-CTO • 3680-CTO • 3712-CTO • 4492-CTO	04W0455	N
5	System board with Intel Core i5-480M processor, NV, SMB, TPM • 3249-CTO, 19x, 1Fx, 1Gx, QCx, QMx • 3323-CTO, 1Ux, 1Vx, 3Qx, QEx, QUx, QVx, QXx, QYx • 3357-CTO • 3626-CTO • 3680-CTO • 3712-CTO • 4492-CTO	04W0456	
5	System board with Intel Core i5-480M processor, NV, SMB, non-TPM • 3249-CTO • 3323-CTO, 1Sx • 3357-CTO • 3626-CTO • 3680-CTO • 3712-CTO • 4492-CTO	04W0457	
5	System board with Intel Core i5-430M processor, NV, AMT, TPM • 3249-CTO • 3323-CTO • 3357-CTO • 3626-CTO • 3680-CTO • 3712-CTO • 4492-CTO	75Y4029	N
5	System board with Intel Core i5-430M processor, NV, AMT, non-TPM • 3249-CTO • 3323-CTO • 3357-CTO • 3626-CTO • 3680-CTO • 3712-CTO • 4492-CTO	75Y4030	N

Downloaded from LpManual.com Manuals

Table 37. Parts list—Overall (continued)

No.	FRU	FRU no.	CRU ID
5	System board with Intel Core i5-430M processor, NV, non-AMT, TPM • 3249-CTO, 3Tx, JTx, JUx • 3323-CTO, 3Zx, CAx, JBx, JCx, JDx, JEx, K3x, K4x, KEx, KFx, KGx, KHx, KMx, KNx, KSx, KTx, L3x, L4x, L5x, L6x, L8x, LBx, LCx, M4x, M6x, MAx, MBx, N9x, NAx, NPx, NXx, NZx • 3357-CTO • 3626-CTO • 3680-CTO • 3712-CTO • 4492-CTO	63Y2164	N
5	System board with Intel Core i5-430M processor, NV, non-AMT, non-TPM • 3249-CTO, 34x, J5x, J8x, J9x, JKx, JLx, JMx, JNx, JPx • 3323-CTO, JZx, K9x, KUx, N2x, N3x, N4x, N5x, NGx, NJx, NLx • 3357-CTO • 3626-CTO • 3680-CTO • 3712-CTO • 4492-CTO	63Y2165	N
5	System board with Intel Core i5-450M processor, NV, non-AMT, TPM • 3249-CTO, 3Kx, 3Lx, 3Mx, 3Nx, CMx, CNx, MSx, MTx • 3323-CTO, AEx, AFx, AJx, AKx, ALx, ARx, ASx, ATx, B4x, B5x, B6x, B7x, B8x, CVx, CWx, E5x, E9x, MFx, RSx • 3357-CTO • 3626-CTO • 3680-CTO • 3712-CTO • 4492-CTO	75Y4197	N
5	System board with Intel Core i5-450M processor, NV, non-AMT, non-TPM • 3249-CTO • 3323-CTO, BCx, BDx • 3357-CTO • 3626-CTO • 3680-CTO • 3712-CTO • 4492-CTO	75Y4198	N
5	System board with Intel Core i5-460M processor, NV, non-AMT, TPM • 3249-CTO, C8x, DEx, DJx, ENx • 3323-CTO, D8x, DLx, DMx, DNx, DTx, DUx, ETx, EXx, EYx, LZx, PNx, PPx, PRx • 3357-CTO • 3626-CTO • 3680-CTO • 3712-CTO • 4492-CTO	04W0298	N
5	System board with Intel Core i5-460M processor, NV, non-AMT, non-TPM • 3249-CTO • 3323-CTO, D9x • 3357-CTO • 3626-CTO • 3680-CTO • 3712-CTO • 4492-CTO	04W0299	N

Downloaded from LpManual.com Manuals

Table 37. Parts list—Overall (continued)

No.	FRU	FRU no.	CRU ID
5	System board with Intel Core i5-520M processor, NV, AMT, TPM • 3249-CTO, 22x, 23x, 24x, 25x, 26x, 27x, 29x, 2Hx, 2Jx, 2Kx, 2Nx, 38x, 3Wx, C2x, C3x • 3323-CTO, 42x, 44x, 49x, 4Ex, 4Gx, 4Kx, 4Lx, 4Mx, 4Nx, 53x, 54x, 55x, 56x, 57x, 5Bx, 5Cx, 5Dx, 5Ex, 5Fx, 5Gx, 5Hx, 5Jx, 5Kx, 5Lx, 5Mx, 5Nx, 5Px, 5Rx, 5Sx, 5Tx, 6Dx, 6Ex, 6Fx, 6Gx, 6Hx, 6Jx, 6Kx, 6Lx, 6Mx, 6Nx, 6Px, 6Rx, 6Sx, 6Tx, 6Ux, 6Vx, 7Yx, 82x, 85x, 86x, 87x, 8Bx, 8Cx, 8Dx, 8Gx, 8Jx, 8Kx, 8Rx, 8Sx, 8Vx, 8Wx, 92x, 93x, 95x, 98x, 99x, 9Ax, 9Cx, 9Ex, 9Gx, 9Hx, 9Nx, 9Sx, 9Vx, A3x, A4x, A5x, AAx, ABx, ADx, C4x, C6x, EZx, LRx, LUx, REx, RGx, RHx, RJx, RPx • 3357-CTO, D2x, D4x, D6x, D7x • 3626-CTO, 12x, 13x, 14x, FBx, FLx, FMx, FNx, FPx, FTx, FXx, FYx, G2x, G4x, G5x, G9x, GAx, GBx, GEx, GFx, GHx, GKx, GLx, GMx, GNx, GPx, GRx, GXx, H2x, H3x, H4x, H5x, H6x, H7x, H9x, HDx, HGx, HMx, HUx, HVx, HWx, HZx, R4x, R9x, RWx, RXx • 3680-CTO, 14x, FBx, P2x, P7x, P8x, P9x, PDx, PEx, PFx, PGx, PHx, PJx, PKx, PLx • 3712-CTO • 4492-CTO	63Y2062	N
5	System board with Intel Core i5-520M processor, NV, AMT, non-TPM • 3249-CTO, 2Ax, 2Bx, 2Cx, 2Dx, 2Mx, 37x • 3323-CTO, 4Ux, 4Wx, 4Yx, 4Zx, 52x, 8Zx, LHx, LKx, RNx • 3357-CTO • 3626-CTO, RMx • 3680-CTO • 3712-CTO • 4492-CTO	63Y2063	N
5	System board with Intel Core i5-520M processor, NV, non-AMT, TPM • 3249-CTO • 3323-CTO • 3357-CTO • 3626-CTO • 3680-CTO • 3712-CTO • 4492-CTO	63Y2068	N
5	System board with Intel Core i5-520M processor, NV, non-AMT, non-TPM • 3249-CTO • 3323-CTO • 3357-CTO • 3626-CTO • 3680-CTO • 3712-CTO • 4492-CTO	63Y2069	N
5	System board with Intel Core i5-520UM, AMT, Non-TPM • 5129-CTO • 5143-CTO • 5385-CTO • 5397-CTO • 5413-CTO • 5442-CTO • 5446-CTO	63Y2173	N

Downloaded from LpManual.com Manuals

Table 37. Parts list—Overall (continued)

No.	FRU	FRU no.	CRU ID
5	System board with Intel Core i5-520UM, AMT, TPM • 5129-CTO • 5143-CTO, 4Kx, 4Lx, 4Mx • 5385-CTO • 5397-CTO, GBx, GCx, GDx, GEx, GFx, GGx • 5413-CTO, L6x, L7x, L8x, L9x, LAx, LBx • 5442-CTO • 5446-CTO	63Y2172	N
5	System board with Intel Core i5-540M processor, NV, AMT, TPM • 3249-CTO, 28x, 2Ex, 2Fx, 2Gx, 2Lx, 2Px, 2Rx, 2Sx, 2Tx, 2Ux, 2Vx, 3Sx • 3323-CTO, 43x, 45x, 46x, 48x, 4Ax, 4Cx, 4Dx, 4Fx, 4Hx, 4Jx, 4Px, 4Rx, 4Sx, 4Tx, 58x, 59x, 5Ax, 5Ux, 5Vx, 5Wx, 5Yx, 5Zx, 62x, 63x, 64x, 65x, 66x, 67x, 68x, 69x, 6Ax, 6Bx, 6Cx, 6Wx, 6Yx, 6Zx, 72x, 73x, 74x, 75x, 76x, 77x, 78x, 79x, 7Ax, 7Bx, 7Cx, 7Dx, 7Ex, 7Fx, 7Gx, 7Hx, 7Jx, 7Kx, 7Lx, 7Mx, 7Nx, 7Px, 7Rx, 7Sx, 7Tx, 7Ux, 7Vx, 7Wx, 7Xx, 7Zx, 83x, 84x, 88x, 89x, 8Ax, 8Ex, 8Fx, 8Lx, 8Nx, 8Px, 8Tx, 8Ux, 8Xx, 8Yx, 94x, 96x, 97x, 9Bx, 9Dx, 9Fx, 9Px, 9Tx, 9Wx, A6x, A8x, A9x, ACx, C5x, C7x, LGx, LPx, LSx, LVx, R2x, RAx, RBx, RDx, RFx, RKx, RLx • 3357-CTO, D3x, D5x • 3626-CTO, 11x, 15x, 16x, F2x, F3x, F4x, F5x, F6x, F7x, F8x, F9x, FAx, FCx, FDx, FEx, FFx, FGx, FHx, FJx, FKx, FRx, FSx, FUx, FVx, FWx, FZx, G3x, G6x, G7x, G8x, GCx, GDx, GJx, GSx, GTx, GUx, GVx, GWx, GYx, GZx, H8x, HEx, HFx, HXx, Hyx, N2x, R3x, R5x, RTx, RUx, RYx, RZx • 3680-CTO, 11x, F7x, F8x, F9x, FAx, HSx, HTx, N2x, P3x, P4x, P5x, P6x, PAx, PBx, PCx • 3712-CTO • 4492-CTO	63Y2064	N
5	System board with Intel Core i5-540M processor, NV, AMT, non-TPM • 3249-CTO, 33x • 3323-CTO, 4Vx, LJx, LLx • 3357-CTO • 3626-CTO • 3680-CTO • 3712-CTO • 4492-CTO	63Y2065	N
5	System board with Intel Core i5-540M processor, NV, non-AMT, TPM • 3249-CTO • 3323-CTO • 3357-CTO • 3626-CTO • 3680-CTO • 3712-CTO • 4492-CTO	63Y2070	N
5	System board with Intel Core i5-540M processor, NV, non-AMT, non-TPM • 3249-CTO • 3323-CTO • 3357-CTO • 3626-CTO • 3680-CTO • 3712-CTO • 4492-CTO	63Y2071	N

Downloaded from LpManual.com Manuals

Table 37. Parts list—Overall (continued)

No.	FRU	FRU no.	CRU ID
5	System board with Intel Core i5-560M processor, NV, AMT, TPM • 3249-CTO, DFx, EPx, ERx, QBx • 3323-CTO, 12x, 1Mx, 1Nx, DAx, DKx, DXx, DZx, PMx, PSx • 3357-CTO • 3626-CTO, 1Kx, PVx, PYx, PZx, Q2x, Q3x, Q8x, QFx, QGx, QHx, QJx, QSx • 3680-CTO, 4Qx, Q6x • 3712-CTO • 4492-CTO	04W0300	N
5	System board with Intel Core i5-560M processor, NV, AMT, non-TPM • 3249-CTO • 3323-CTO • 3357-CTO • 3626-CTO • 3680-CTO • 3712-CTO • 4492-CTO	04W0301	N
5	System board with Intel Core i5-580M processor, NV, AMT, TPM • 3249-CTO, 3Yx, DGx • 3323-CTO, 1Px, 1Rx, DVx, DWx, DYx, PTx • 3357-CTO • 3626-CTO, PWx, PXx, Q4x, Q5x, QKx • 3680-CTO, Q7x • 3712-CTO • 4492-CTO	04W0302	N
5	System board with Intel Core i5-580M processor, NV, AMT, non-TPM • 3249-CTO • 3323-CTO • 3357-CTO • 3626-CTO • 3680-CTO • 3712-CTO • 4492-CTO	04W0303	N
5	System board with Intel Core i7-620M processor, NV, AMT, TPM • 3249-CTO, 3Rx, DHx • 3323-CTO, 1Lx, 9Jx, 9Kx, 9Lx, 9Mx, 9Rx, 9Ux, 9Yx, 9Zx, A2x, A7x, DBx, LTx, LWx, PUx, RCx • 3357-CTO • 3626-CTO, H8x, H9x, HAx, HBx, HCx, HHx, HJx, HKx, HLx, R4x, R5x, R6x, R6x, R7x, R8x, RVx • 3680-CTO, H8x, H9x, HAx, HBx, HCx, HNx, HPx, HQx, HRx • 3712-CTO • 4492-CTO	63Y2066	N
5	System board with Intel Core i7-620M processor, NV, AMT, non_TPM • 3249-CTO, 32x • 3323-CTO • 3357-CTO • 3626-CTO • 3680-CTO • 3712-CTO • 4492-CTO	63Y2067	N

Downloaded from LpManual.com Manuals

Table 37. Parts list—Overall (continued)

No.	FRU	FRU no.	CRU ID
5	System board with Intel Core i7-620LM processor, LV, AMT, TPM • 5129-CTO, 72x, 73x, 74x, 75x, 76x • 5143-CTO, 29x, 2Ax, 2Bx, 2Cx, 2Dx, 2Ex, 2Fx, 2Gx, 2Hx, 2Jx, 2Kx, 2Lx, 2Mx, 2Nx, 2Px, 2Rx, 3Wx, 3Yx, 44x, 45x, 48x, 49x, 4Cx, 4Dx, 4Hx • 5385-CTO, D4x, D5x, D6x, D7x • 5397-CTO, F4x, F5x, F6x, F7x, F8x, FKx, FMx, FNx, G4x, G5x, G6x, G7x, GAx • 5413-CTO, L2x, L3x • 5442-CTO • 5446-CTO	63Y2072	N
5	System board with Intel Core i7-620LM processor, LV, AMT, non-TPM • 5129-CTO • 5143-CTO, 43x, 4Gx • 5385-CTO • 5397-CTO • 5413-CTO • 5442-CTO • 5446-CTO	63Y2073	N
5	System board with Intel Core i7-640LM processor, LV, AMT, TPM • 5129-CTO, 77x, 78x, R1x • 5143-CTO, 22x, 23x, 24x, 25x, 28x, 2Sx, 2Tx, 2Ux, 2Vx, 2Wx, 2Yx, 2Zx, 32x, 33x, 34x, 35x, 36x, 37x, 38x, 39x, 3Ax, 3Ux, 3Vx, 3Zx, 42x, 46x, 47x, 4Ax, 4Bx, 4Ex, 4Jx, 4Nx, 4Px • 5385-CTO, D2x, D3x, D8x, D9x • 5397-CTO, F2x, F3x, F9x, FAx, FBx, FCx, FDx, FEx, FFx, FGx, FHx, FJx, FPx, FRx, FSx, FTx, FUx, FVx, FWx, FXx, FYx, FZx, G2x, G3x, G8x, G9x • 5413-CTO, FDx, FEx, FFx, FGx, L4x, L5x • 5442-CTO • 5446-CTO	63Y2074	N
5	System board with Intel Core i7-640LM processor, LV, AMT, non-TPM • 5129-CTO • 5143-CTO, 26x, 27x • 5385-CTO • 5397-CTO • 5413-CTO • 5442-CTO • 5446-CTO	63Y2075	N
5	System board with Intel Core U3400 processor, LV, non-AMT, TPM • 3249-CTO, 2Wx, MLx, MMx, MNx, MPx, MVx, MWx, MXx, MYx, MZx • 3323-CTO, AVx, AWx • 3357-CTO, 3Px • 3626-CTO, 17x • 3680-CTO • 3712-CTO • 4492-CTO	75Y4901	N
5	System board with Intel Core U3400 processor, LV, non-AMT, non-TPM • 3249-CTO, MUx • 3323-CTO, B9x • 3357-CTO • 3626-CTO • 3680-CTO • 3712-CTO • 4492-CTO	75Y4902	N

Downloaded from LpManual.com Manuals

Table 37. Parts list—Overall (continued)

No.	FRU	FRU no.	CRU ID
5	System board with Intel Core U5400 processor, non-AMT, TPM • 3249-CTO, 2Yx, 2Zx, 39x, 3Ax, 3Bx, 3Cx, CJx, CPx • 3323-CTO, AUx, AXx, AYx, BWx, ELx, EMx • 3357-CTO • 3626-CTO • 3680-CTO • 3712-CTO • 4492-CTO	75Y4199	N
5	System board with Intel Core U5400 processor, non-AMT, non-TPM • 3249-CTO, 2Xx • 3323-CTO, BAx • 3357-CTO • 3626-CTO • 3680-CTO • 3712-CTO • 4492-CTO	75Y4900	N
5	System board with Intel Core i7-620UM processor, ULV, AMT, TPM • 5129-CTO • 5143-CTO • 5385-CTO • 5397-CTO • 5413-CTO • 5442-CTO • 5446-CTO	63Y2076	N
5	System board with Intel Core i7-620UM processor, ULV, AMT, non-TPM • 5129-CTO • 5143-CTO • 5385-CTO • 5397-CTO • 5413-CTO • 5442-CTO • 5446-CTO	63Y2077	N
6	512-MB DDR3-1066 SDRAM SO-DIMM (PC3-8500) card • 7454-CTO • 7455-CTO • 7457-CTO, 4Bx, 4Hx • 7458-CTO • 7459-CTO • 2023-CTO • 2024-CTO • 7462-CTO • 7465-CTO • 7466-CTO • 7469-CTO • 7470-CTO • 2046-CTO • 2047-CTO	43R1775	**

Downloaded from LpManual.com Manuals

Table 37. Parts list—Overall (continued)

No.	FRU	FRU no.	CRU ID
6	1-GB DDR3-1066 SDRAM SO-DIMM (PC3-8500) card • 7454-CTO, 23x, 24x, 25x, 26x, 28x, 29x, 2Gx, 2Hx, 2Jx, 2Nx, 2Px, 2Rx, 2Sx, 2Tx, 2Ux, 2Vx, 2Wx, 2Xx, 2Yx, 3Mx, 3Nx, 3Px, 3Qx, 3Yx, 92x, 93x, 97x, 98x, 9Gx, GEx, GFx • 7455-CTO, 33x, 36x, 39x, 3Ax, 3Dx, 3Ex, 3Fx, 3Kx, 3Lx, 3Px, 3Qx, 3Rx, 42x, 43x, 48x, 49x, 4Ax, 8Ex, DAx, DBx, DCx, DDx, DEx, DFx, F3x, FXx, FYx, P6x, P7x, P9x, PDx, PFx • 7457-CTO, 44x, 45x, 47x, 48x, 49x, 4Ax, 4Ex, 4Gx, 4Jx, 4Kx, 4Lx, 4Mx, 4Nx, 4Px, 4Qx, 4Vx, 4Wx, 54x, 57x, 58x • 7458-CTO, 26x, 2Ex, 2Kx, 2Tx, 54x, 55x, 56x, 5Ax, 5Ex, 5Px, 5Qx, 5Rx, 5Sx, 68x, 69x, 6Px, 6Qx, 73x, 74x, 76x, 78x, 7Cx, 7Ex, 7Fx, 7Gx, 7Hx, 7Lx, 7Mx, 7Qx, 7Rx, 7Sx, 7Ux, 7Vx, 7Wx, 7Xx, 7Yx, 84x, 85x, 87x, 8Bx, 8Ex, 8Fx, 8Gx, 8Jx, FNx, FPx, FTx, FYx, X5x • 7459-CTO, 5Ex, 62x, 63x, 66x, 67x, 68x, 6Ax, 6Cx, 6Dx, 6Fx, 6Kx, 6Lx, 6Qx, 6Rx, 6Tx, 6Wx, 6Xx, 6Yx, 6Zx, H2x, H4x, M3x • 2023-CTO • 2024-CTO • 7462-CTO, 22x, 27x, 42x, 4Kx, 4Lx, 4Nx, 4Px, 4Qx, 4Sx, 4Tx, 4Ux, 4Vx, F2x, F3x, F6x, F7x, FAx, FBx, FDx, FHx, FJx, FLx, FNx • 7465-CTO, 23x, 2Lx, 2Mx, 2Px, 2Qx, 2Rx, 2Tx, 2Ux, 2Vx, 2Wx, 2Xx, 2Zx, 3Jx, 3Lx, 3Mx, 3Nx, 3Px, 3Rx, 3Sx, 3Tx, 3Wx, DGx, DHx, DJx, DKx, G5x, G6x • 7466-CTO, 32x, 3Kx, 3Mx, 3Px, 3Qx, 46x, 4Hx, 4Jx, 95x, 9Vx, 9Wx, 9Xx, FXx, FZx, H2x, H3x, H4x, N2x • 7469-CTO, 52x, 63x, 64x, 6Lx, 6Mx, 6Px, 6Qx, 6Ux, 6Vx, 6Xx, 6Yx, 75x, 76x, 77x, 7Ax, 7Bx, 7Dx, 7Ex, 7Fx, 7Hx, 7Kx, 7Xx, 83x, 84x, 85x, 8Hx, 8Tx, 9Gx, GCx • 7470-CTO, 62x, 6Nx, 6Ux, 6Vx, 8Tx, 8Ux • 2046-CTO • 2047-CTO	43R1989	**
6	1-GB DDR3-1066 SDRAM SO-DIMM (PC3-8500) card • 3249-CTO, 22x, 23x, 24x, 25x, 26x, 27x, 29x, 2Ax, 2Bx, 2Cx, 2Dx, 2Jx, 2Kx, 2Lx, J3x, J4x, J6x, J7x, J8x • 3323-CTO, 42x, 44x, 49x, 4Cx, 4Ex, 4Gx, 4Kx, 4Lx, 4Mx, 4Nx, 4Px, 4Rx, 4Ux, 4Vx, 4Wx, 4Yx, 4Zx, 52x, 53x, 54x, 55x, 58x, 59x, 7Yx, 82x, 85x, 86x, 87x, 88x, 89x, 8Fx, 8Bx, 8Cx, 8Dx, 8Nx, 8Px, 8Zx, 98x, 99x, 9Ax, 9Cx, 9Fx, K5x, K6x, K7x, K8x, K9x, KUx, KVx, KYx, KZx, L2x, L4x, L5x, L7x, LBx, LCx, LEx, LFx, R2x • 3357-CTO, D2x, D4x, D5x, D6x • 3626-CTO, F7x, G2x, G4x, G5x, G6x, G7x, G8x, G9x, GAx, GBx, GDx, GHx • 3680-CTO • 3712-CTO • 4492-CTO • 5129-CTO • 5143-CTO, 22x, 24x, 26x, 3Ux, 3Wx, 3Zx, 42x, 43x, 4Gx • 5385-CTO, D2x, D3x • 5397-CTO, F2x, F3x, FEx, FHx, FJx, G2x, G4x • 5413-CTO, FEx • 5442-CTO • 5446-CTO	55Y3712	**

Downloaded from LpManual.com Manuals

Table 37. Parts list—Overall (continued)

No.	FRU	FRU no.	CRU ID
6	2-GB DDR3-1066 SDRAM SO-DIMM (PC3-8500) card • 7454-CTO, 22x, 27x, 29x, 2Gx, 2Jx, 2Kx, 2Lx, 2Mx, 2Nx, 2Px, 2Qx, 2Zx, 32x, 33x, 34x, 36x, 38x, 3Hx, 3Jx, 3Kx, 3Lx, 3Nx, 3Qx, 3Rx, 3Sx, 3Tx, 3Vx, 3Wx, 3Xx, 3Zx, 95x, 96x, 97x, 98x, 9Bx, 9Cx, 9Fx, 9Gx, 9Hx, 9Jx, 9Lx, G2x, G3x, G4x, G5x, G6x, G7x, G8x, G9x, GBx, GCx, GDx, GEx, GGx, GHx, GJx, GKx, GLx, GMx, GNx, GPx • 7455-CTO, 32x, 33x, 34x, 35x, 38x, 3Bx, 3Cx, 3Ex, 3Gx, 3Hx, 3Jx, 3Lx, 3Mx, 3Nx, 3Qx, 3Sx, 3Tx, 3Ux, 3Vx, 3Wx, 3Xx, 3Yx, 3Zx, 42x, 43x, 4Ax, 44x, 45x, 46x, 47x, 48x, 4Bx, 4Cx, 4Dx, 4Ex, 4Fx, 4Gx, 4Hx, 4Jx, 4Kx, 4Lx, 4Mx, 4Nx, 4Px, 4Qx, 4Rx, 4Sx, 4Tx, 4Ux, 4Vx, 4Wx, 4Xx, 4Yx, 4Zx, 82x, 83x, 84x, 85x, 86x, 87x, 88x, 89x, 8Ax, 8Bx, 8Cx, 8Dx, 8Ex, 8Fx, 8Gx, 8Hx, 8Jx, 8Kx, 8Lx, 8Mx, 8Nx, 8Px, 8Qx, 8Rx, 8Sx, 8Tx, 8Ux, 8Vx, 8Wx, 8Xx, 8Yx, 8Zx, D2x, D3x, D5x, D6x, D7x, D8x, D9x, DAx, DBx, DCx, DDx, DEx, DFx, DGx, DHx, DJx, DKx, DLx, DMx, DNx, DPx, DQx, DRx, DSx, DTx, DUx, DVx, DWx, DXx, DYx, DZx, F2x, F3x, F4x, F5x, F6x, F7x, F9x, FBx, FCx, FDx, FEx, FFx, FGx, FHx, FJx, FKx, FLx, FMx, FNx, FPx, FQx, FRx, FSx, FTx, FUx, FVx, FWx, FXx, FYx, FZx, N2x, N3x, N4x, N5x, P2x, P3x, P4x, P5x, P6x, P7x, P9x, PAx, PBx, PCx, PDx, PEx, PFx, PGx, PHx, PJx • 7457-CTO, 42x, 43x, 46x, 4Cx, 4Dx, 4Fx, 4Rx, 4Sx, 4Tx, 4Ux, 52x, 53x, 54x, 55x, 56x, 57x, 58x • 7458-CTO, 22x, 24x, 25x, 26x, 27x, 28x, 29x, 2Ax, 2Bx, 2Cx, 2Dx, 2Ex, 2Fx, 2Kx, 2Lx, 2Mx, 2Nx, 2Px, 2Qx, 2Rx, 2Sx, 2Tx, 2Vx, 4Xx, 4Yx, 52x, 53x, 57x, 58x, 59x, 5Bx, 5Cx, 5Dx, 5Fx, 5Hx, 5Jx, 5Lx, 5Mx, 5Nx, 5Tx, 62x, 63x, 64x, 65x, 66x, 67x, 68x, 6Ax, 6Bx, 6Cx, 6Dx, 6Ex, 6Jx, 6Kx, 6Lx, 6Mx, 6Nx, 6Px, 6Qx, 6Rx, 6Sx, 6Tx, 6Ux, 6Vx, 6Wx, 6Xx, 6Yx, 6Zx, 72x, 77x, 79x, 7Bx, 7Dx, 7Jx, 7Kx, 7Nx, 7Px, 7Tx, 7Zx, 82x, 83x, 86x, 88x, 89x, 8Ax, 8Cx, 8Dx, 8Hx, 8Kx, 8Lx, 8Mx, 8Nx, 8Px, 8Qx, 8Rx, 8Sx, 8Tx, 8Wx, 8Xx, 8Yx, 8Zx, E2x, F2x, F3x, F4x, F5x, F6x, F7x, F8x, F9x, FAx, FCx, FDx, FEx, FFx, FGx, FHx, FJx, FKx, FLx, FMx, FQx, FSx, FUx, FVx, FWx, FXx, G3x, G4x, G5x, G6x, G7x, G8x, G9x, GBx, GCx, GDx, GEx, GFx, M2x, M3x, X4x, X5x • 7459-CTO, 5Fx, 64x, 65x, 69x, 6Bx, 6Ex, 6Gx, 6Jx, 6Mx, 6Nx, 6Px, 6Sx, 6Ux, 6Vx, 72x, 73x, 74x, 75x, E3x, H3x, H5x, H6x, H7x, M2x, M4x • 2023-CTO • 2024-CTO(continued)	43R1969	**
6	(continued) 2-GB DDR3-1066 SDRAM SO-DIMM (PC3-8500) card • 7462-CTO, 23x, 24x, 25x, 26x, 28x, 29x, 2Ax, 2Bx, 2Cx, 2Dx, 2Ex, 2Fx, 2Gx, 2Hx, 43x, 44x, 45x, 46x, 47x, 48x, 49x, 4Ax, 4Bx, 4Cx, 4Dx, 4Ex, 4Fx, 4Gx, 4Hx, 4Jx, 4Mx, 4Rx, 4Wx, 4Xx, 4Yx, 4Zx, F4x, F5x, F8x, F9x, FAx, FBx, FCx, FEx, FFx, FGx, FJx, FKx, FMx, FPx, FQx, FRx, FSx, FTx, FUx, FVx • 7465-CTO, 24x, 25x, 26x, 27x, 28x, 29x, 2Dx, 2Ex, 2Fx, 2Hx, 2Jx, 2Kx, 2Nx, 2Sx, 2Yx, 3Kx, 3Lx, 3Sx, 3Tx, 3Ux, 3Vx, 3Xx, 3Yx, 3Zx, D2x, D3x, D4x, D6x, D7x, D8x, D9x, DAx, DBx, DCx, DDx, DEx, DFx, DGx, DHx, DJx, DKx, G2x, G3x, G4x, G7x, G8x, G9x, GAx, GBx • 7466-CTO, 33x, 34x, 35x, 38x, 39x, 3Ax, 3Bx, 3Cx, 3Dx, 3Ex, 3Fx, 3Gx, 3Hx, 3Jx, 3Lx, 3Nx, 3Rx, 3Sx, 3Tx, 3Ux, 3Vx, 3Wx, 3Xx, 3Yx, 3Zx, 43x, 44x, 45x, 46x, 47x, 48x, 49x, 4Ax, 4Bx, 4Cx, 4Dx, 4Ex, 4Fx, 4Kx, 4Lx, 4Mx, 4Nx, 4Px, 4Qx, 4Rx, 4Sx, 4Tx, 4Ux, 4Vx, 4Wx, 4Xx, 4Yx, 4Zx, 52x, 53x, 54x, 55x, 56x, 57x, 58x, 59x, 5Ax, 5Bx, 5Cx, 5Dx, 5Ex, 5Fx, 5Gx, 5Hx, 5Jx, 5Kx, 5Lx, 5Mx, 5Nx, 5Px, 5Qx, 5Rx, 5Sx, 5Tx, 5Ux, 5Vx, 5Wx, 5Xx, 5Yx, 5Zx, 92x, 93x, 94x, 96x, 97x, 98x, 99x, 9Ax, 9Bx, 9Cx, 9Dx, 9Ex, 9Fx, 9Gx, 9Hx, 9Jx, 9Kx, 9Lx, 9Mx, 9Nx, 9Px, 9Qx, 9Rx, 9Sx, 9Tx, 9Ux, 9Yx, 9Zx, DLx, DMx, F2x, F3x, F4x, F5x, F6x, F7x, F8x, F9x, FAx, FBx, FCx, FDx, FEx, FFx, FGx, FHx, FJx, FKx, FLx, FMx, FNx, FPx, FQx, FRx, FSx, FTx, FUx, FVx, FWx, FXx, FYx, FZx, H3x, H4x, H5x, H6x, H7x, H8x, H9x, HAx, HBx, HCx, HDx, HEx, N2x • 7469-CTO, 53x, 54x, 55x, 56x, 57x, 58x, 59x, 5Ax, 5Bx, 5Cx, 5Dx, 5Ex, 5Fx, 5Gx, 5Hx, 5Jx, 5Kx, 5Lx, 5Mx, 5Nx, 5Px, 5Qx, 5Rx, 5Sx, 5Tx, 5Ux, 5Vx, 5Wx, 5Xx, 5Yx, 5Zx, 62x, 65x, 66x, 67x, 68x, 69x, 6Ax, 6Bx, 6Cx, 6Dx, 6Ex, 6Fx, 6Gx, 6Hx, 6Jx, 6Kx, 6Lx, 6Mx, 6Nx, 6Px, 6Qx, 6Rx, 6Tx, 6Ux, 6Vx, 6Wx, 6Xx, 6Yx, 6Zx, 72x, 73x, 74x, 78x, 79x, 7Cx, 7Gx, 7Jx, 7Lx, 7Mx, 7Nx, 7Px, 7Qx, 7Rx, 7Sx, 7Tx, 7Ux, 7Vx, 7Yx, 7Zx, 82x, 86x, 87x, 88x, 89x, 8Ax, 8Bx, 8Cx, 8Dx, 8Ex, 8Fx, 8Gx, 8Hx, 8Jx, 8Kx, 8Lx, 8Mx, 8Nx, 8Px, 8Qx, 8Rx, 8Sx, 8Tx,	43R1969	**

Downloaded from LpManual.com Manuals

Table 37. Parts list—Overall (continued)

No.	FRU	FRU no.	CRU ID
	8Ux, 8Vx, 8Wx, 8Xx, 8Yx, 8Zx, 93x, 94x, 95x, 96x, 97x, 98x, 99x, 9Ax, 9Bx, 9Cx, 9Dx, 9Ex, 9Gx, E2x, G2x, G3x, G4x, G5x, G6x, G7x, G8x, G9x, GAx, GBx • 7470-CTO, 5Gx, 5Hx, 63x, 64x, 65x, 68x, 69x, 6Ax, 6Bx, 6Cx, 6Dx, 6Ex, 6Fx, 6Gx, 6Hx, 6Jx, 6Kx, 6Lx, 6Px, 6Qx, 6Rx, 6Sx, 6Tx, 72x, 73x, 74x, 75x, 76x, 77x, 8Zx, E2x • 2046-CTO • 2047-CTO		
6	2-GB DDR3-1066 SDRAM SO-DIMM (PC3-8500) card • 3249-CTO, 22x, 23x, 24x, 25x, 26x, 27x, 28x, 29x, 39x, 1Bx, 1Cx, 1Dx, 1Ex, 1Fx, 1Gx, 1Hx, 1Jx, 2Ax, 2Bx, 2Cx, 2Dx, 2Ex, 2Fx, 2Gx, 2Jx, 2Hx, 2Kx, 2Mx, 2Rx, 2Sx, 2Lx, 2Mx, 2Wx, 2Xx, 2Yx, 2Zx, 33x, 3Sx, 34x, 3Tx, 35x, 3Ux, 36x, 3Vx, 37x, 3Wx, 38x, 3Ax, 3Bx, 3Cx, 3Dx, 3Ex, 3Fx, 3Gx, 3Hx, 3Jx, 3Kx, 3Lx, 3Mx, 3Nx, 3Xx, 3Yx, C2x, C3x, CBx, CCx, CDx, CEx, CFx, CGx, CHx, CJx, CKx, CLx, CMx, CNx, CPx, CRx, CSx, CTx, CUx, DCx, DJx, ENx, EPx, ERx, ESx, J2x, J3x, J4x, J5x, J6x, J7x, J8x, J9x, JAx, JFx, JGx, JHx, JJx, JKx, JLx, JMx, JNx, JPx, JQx, JRx, JSx, JTx, JUx, MCx, MDx, MGx, MHx, MJx, MKx, MLx, MMx, MNx, MPx, MRx, MSx, MUx, MVx, MWx, MXx, MYx, MZx, NRx, NSx, NTx, Nux, QAx, QBx, QLx, QMx, QNx, QPx, QRx, QDx, QCx, Q9x, RYx, RZx, Q8x • 3323-CTO, 12x, 42x, 43x,44x, 45x, 46x, 48x, 49x, 3Zx, 4Ax, 4Bx, 4Dx, 4Ex, 4Fx, 4Gx, 4Hx, 4Jx, 4Kx, 4Lx, 4Mx, 4Nx, 4Rx, 4Sx, 4Tx, 4Ux, 4Vx, 4Wx, 4Yx, 4Zx, 52x, 53x, 54x, 55x, 56x, 57x, 58x, 5Ax, 5Bx, 5Cx, 5Dx, 5Ex, 5Fx, 5Gx, 5Hx, 5Jx, 5Kx, 5Lx, 5Mx, 5Nx, 5Px, 5Rx, 5Sx, 5Tx, 5Ux, 5Vx, 5Wx, 5Yx, 5Zx, 62x, 63x, 64x, 65x, 66x, 67x, 68x, 69x, 6Ax, 6Bx, 6Cx, 6Dx, 6Ex, 6Fx, 6Gx, 6Hx, 6Jx, 6Kx, 6Lx, 6Mx, 6Nx, 6Px, 6Rx, 6Sx, 6Tx, 6Ux, 6Vx, 6Wx, 6Yx, 6Zx, 72x, 73x, 74x, 75x, 76x, 77x, 78x, 79x, 7Ax, 7Bx, 7Cx, 7Dx, 7Ex, 7Fx, 7Gx, 7Hx, 7Jx, 7Kx, 7Lx, 7Mx, 7Nx, 7Px, 7Rx, 7Sx, 7Tx, 7Ux, 7Vx, 7Wx, 7Xx, 7Zx, 82x, 83x, 84x, 85x, 86x, 87x, 89x, 8Ax, 8Bx, 8Cx, 8Dx, 8Ex, 8Gx, 8Jx, 8Kx, 8Lx, 8Nx, 8Px, 8Rx, 8Sx, 8Tx, 8Ux, 8Vx, 8Wx, 8Xx, 8Yx, 8Zx, 92x, 93x, 94x, 95x, 96x, 97x, 98x, 99x, 9Ax, 9Bx, 9Cx, 9Dx, 9Ex, 9Gx, 9Hx, 9Jx, 9Kx, 9Lx, 9Mx, 9Nx, 9Px, 9Rx, 9Sx, 9Tx, 9Ux, 9Vx, 9Wx, 9Yx, 1Mx, 1Nx, 1Rx, 1Yx, 1Zx, A3x, A4x, A5x, A6x, A7x, A8x, AAx, ABx, ADx, AGx, AHx, AMx, ANx, APx, ARx, ASx, ATx, AUx, AVx, AWx, AXx, AYx, AZx, B2x, B3x, B4x, B5x, B7x, B9x, BAx, BBx, BCx, BDx, BEx, BFx, BGx, BHx, BKx, BMx, BNx, BSx, BTx, BUx, BVx, BWx, BXx, BYx, BZx, C4x, C5x, C6x, C7x, C9x, CAx, CWx, CYx, DAx, DKx, DNx, DPx, DRx, DSx, E2x, E3x, E4x, E5x, E6x, E7x, E9x, EAx, EBx, EFx, EHx, EKx, ELx, EMx, ETx, EVx, EYx, EZxJBx, JCx, JDx, JEx, JVx, JWx, JXx, JYx, JZx, K2x, K3x, K4x, K5x, K6x, K7x, K8x, K9x, KAx, KCx, KDx, KEx, KFx, KGx, KHx, KJx, KLx, KMx, KNx, KPx, KRx, KSx, KTx, KUx, KVx, KWx, KYx, KZx, L2x, L3x, L4x, L5x, L6x, L7x, L8x, LAx, LBx, LCx, LDx, LEx, LFx, LHx, LJx, LKx, LLx, LPx, LRx, LSx, LTx, LUx, LVx, LWx, LXx, M2x, M3x, M4x, M5x, M6x, M7x, M8x, M9x, MEx, MFx, N2x, N3x, N4x, N5x, N6x, N7x, N8x, N9x, NAx, NBx, NCx, NDx, NEx, NFx, NGx, NHx, NJx, NKx, NLx, NNx, NPx, NWx, NXx, NYx, NZx, QUx, QZx, PNx, PPx, PRx, R2x, RRx, RSx • 3357-CTO, D2x, D3x, D4x, D5x, D6x, D7x, 3Px, LMx, LNx • 3626-CTO, 11x, 12x, 13x, 14x, 15x, 16x, 17x, 18x, 19x, F2x, F3x, F4x, F5x, F6x, F7x, F8x, F9x, FAx, FBx, FCx, FDx, FEx, FFx, FGx, FHx, FJx, FKx, FLx, FMx, FNx, FPx, FRx, FSx, FTx, FUx, FVx, FWx, FXx, FYx, FZx, G2x, G3x, G4x, G5x, G6x, G7x, G9x, GAx, GBx, GCx, GDx, GEx, GFx, GHx, GHx, GJx, GJx, GKx, GLx, GMx, GNx, GPx, GRx, GSx, GTx, GUx, GVx, GWx, GXx, GYx, GZx, H2x, H3x, H4x, H5x, H6x, H7x, H8x, HDx, Hex, HFx, HGx, HHx, HJx, HKx, HLx, HMx, HUx, HVx, HWx, HXx, Hyx, HZx, QFx, QTx, PVx, PXx, PYx, PZx, Q2x, , R3x, R4x, R5x, R6x, R9x, N2x • 3680-CTO, 11x, 14x, F7x, F8x, F9x, FAx, FBx, HNx, HPx, HQx, HRx, HSx, HTx, P2x, P3x, P4x, P5x, P6x, P7x, P8x, P9x, PAx, PBx, PCx, PDx, PEx, PFx, PGx, PHx, PJx, PKx, PLx, N2x, Q6x • 3712-CTO • 4492-CTO • 5129-CTO, R1x, 72x, 73x, 74x, 75x, 76x, 77x, 78x • 5143-CTO, 22x, 23x, 24x, 25x, 26x, 27x, 28x, 29x, 2Ax, 2Bx, 2Cx, 2Dx, 2Ex, 2Fx, 2Gx, 2Hx, 2Jx, 2Kx, 2Lx, 2Mx, 2Nx, 2Px, 2Rx, 2Sx, 2Tx, 2Ux, 2Vx, 2Wx, 2Yx, 2Zx, 32x, 33x, 34x, 35x, 36x, 37x, 38x, 39x, 3Ax, 3Ux, 3Vx, 3Wx, 3Yx, 3Zx, 42x, 43x, 44x, 45x, 46x, 47x, 48x, 49x, 4Ax, 4Bx, 4Cx, 4Dx, 4Ex, 4Gx, 4Hx, 4Jx • 5385-CTO, D2x, D3x, D4x, D5x, D6x, D7x, D8x, D9x	55Y3713	**

Downloaded from LpManual.com Manuals

Table 37. Parts list—Overall (continued)

No.	FRU	FRU no.	CRU ID
	• 5397-CTO, F2x, F3x, F4x, F5x, F6x, F7x, F8x, F9x, FAx, FBx, FCx, FDx, FEx, FFx, FGx, FHx, FJx, FKx, FMx, FNx, FPx, FRx, FSx, FTx, FUx, FVx, FWx, FXx, FYx, FZx, G2x, G3x, G5x, G6x, G7x, G8x, G9x, GAx, GBx, GDx, GFx, GGx • 5413-CTO, FDx, FEx, FFx, FGx, L2x, L3x, L4x, L5x, L8x, L9x, LAx, LBx • 5442-CTO • 5446-CTO		
6	4-GB DDR3-1066 SDRAM SO-DIMM (PC3-8500) card • 3249-CTO, 28x, 2Gx, 2Hx, J5x, 2Nx, 2Px, 2Tx, 2Ux, 2Vx, 32x, 3Rx, MTx, C8x, DDx, DEx, DFx, DGx, DHx, 19x, 1Ax • 3323-CTO, 43x, 45x, 46x, 48x, LGx, 4Cx, 4Dx, 4Jx, 4Px, 4Tx, 59x, 5Ax, 7Fx, 7Gx, 7Hx, 7Jx, 7Kx, 7Lx, 7Mx, 7Nx, 7Px, 7Rx, 7Sx, 7Tx, 7Ux, 7Vx, 7Wx, 7Xx, 84x, 88x, 8Ax, 8Gx, 8Jx, 8Kx, 8Lx, 8Nx, 8Px, KAx, KCx, KDx, KEx, KFx, KGx, KHx, 8Tx, 8Ux, 8Xx, 8Yx, KMx, KNx, KSx, KTx, L3x, MAx, L6x, MBx, 9Dx, 9Fx, 9Gx, 9Zx, A2x, A9x, ACx, AEx, AFx, AJx, AKx, ALx, BPx, BRx, RNx, RAx, RBx, RCx, RDx, REx, RFx, RGx, RHx, RJx, RKx, RLx, E8x, RPx, CVx, CXx, CZx, EEx, EGx, EJx, EUx, EWx, EXx, DBx, DLx, DMx, DTx, DUx, DVx, DWx, DXx, DYx, DZx, PMx, PSx, PTx, PUx, QEx, 1Lx, 1Px, 1Ux, 1Vx, 3Qx • 3357-CTO, D3x, D7x • 3626-CTO, F3x, F5x, F7x, FRx, FSx, FWx, FZx, G8x, H9x, GVx, GWx, H8x, H9x, HAx, HBx, HCx, R4x, R5x, R6x, R7x, R8x, RMx, RTx, RUx, RVx, RWx, RXx, PWx, Q3x, Q4x, Q5x, QKx, QJx, QHx, QGx, 1Kx • 3680-CTO, P6x, F7x, PBx, H8x, H9x, HAx, HBx, HCx, Q7x, 4Qx • 3712-CTO • 4492-CTO • 5129-CTO, 72x, 73x • 5143-CTO, 23x, 25x, 27x, 28x, 3Vx, 3Yx, 46x, 47x, 4Ax, 4Bx, 4Cx, 4Dx, 4Ex, 4Jx, 4Kx, 4Lx, 4Mx, 4Nx, 4Px • 5385-CTO, D4x • 5397-CTO, FCx, FFx, FNx, FRx, G3x, G5x, GAx, GEx • 5413-CTO, FFx, L5x, L6x • 5442-CTO • 5446-CTO	55Y3714	**
6	1-GB DDR3-1333 SDRAM SO-DIMM (PC3-10600) card • 3249-CTO • 3323-CTO • 3357-CTO • 3626-CTO • 3680-CTO • 3712-CTO • 4492-CTO • 5129-CTO • 5143-CTO • 5385-CTO • 5397-CTO • 5413-CTO • 5442-CTO • 5446-CTO	55Y3715	**

Downloaded from LpManual.com Manuals

Table 37. Parts list—Overall (continued)

No.	FRU	FRU no.	CRU ID
6	2-GB DDR3-1333 SDRAM SO-DIMM (PC3-10600) card • 3249-CTO • 3323-CTO • 3357-CTO • 3626-CTO • 3680-CTO • 3712-CTO • 4492-CTO • 5129-CTO • 5143-CTO • 5385-CTO • 5397-CTO • 5413-CTO • 5442-CTO • 5446-CTO	55Y3716	**
6	4-GB DDR3-1333 SDRAM SO-DIMM (PC3-10600) card • 3249-CTO • 3323-CTO • 3357-CTO • 3626-CTO • 3680-CTO • 3712-CTO • 4492-CTO • 5129-CTO • 5143-CTO • 5385-CTO • 5397-CTO • 5413-CTO • 5442-CTO • 5446-CTO	55Y3717	**
7	Qualcomm UNDP1 - Wireless WAN card • 7454-CTO, 3Vx • 7455-CTO • 7457-CTO • 7458-CTO, 5Fx, 8Ax • 7459-CTO • 2023-CTO • 2024-CTO • 7462-CTO • 7465-CTO • 7466-CTO • 7469-CTO • 7470-CTO • 2046-CTO • 2047-CTO	42T0961	**

Downloaded from LpManual.com Manuals

Table 37. Parts list—Overall (continued)

No.	FRU	FRU no.	CRU ID
7	Integrated Mobile Broadband (Gobi 2000 3G with GPS) • 3249-CTO, 2Gx, 2Px, 2Ux • 3323-CTO, 46x, 4Dx, 4Jx, 4Px, 4Tx, 59x, 5Ax, 8Ux, 8Yx, 9Dx, 9Gx, A9x, ACx, AEx, ALx, DMx, E8x, EJx, KNx, KTx, L3x, L6x, LGx, MAx, MBx, PUx, RDx, REx, RFx, RGx, RHx, RJx, RKx, RLx • 3357-CTO • 3626-CTO, F3x, FRx, FSx, FWx, GVx, GWx, H8x, PWx • 3680-CTO, H8x, P6x, PBx, Q7x • 3712-CTO • 4492-CTO • 5129-CTO • 5143-CTO • 5385-CTO • 5397-CTO • 5413-CTO • 5442-CTO • 5446-CTO	60Y3183	**
7	Integrated China Mobile Mobile Broadband (Leadcore LC5370D) • 3249-CTO • 3323-CTO • 3357-CTO • 3626-CTO • 3680-CTO • 3712-CTO • 4492-CTO • 5129-CTO • 5143-CTO • 5385-CTO • 5397-CTO • 5413-CTO • 5442-CTO • 5446-CTO	60Y3225	**
7	Integrated China Telecom Mobile Broadband (Huawei EM660) • 3249-CTO • 3323-CTO, 84x, 88x, 8Ax • 3357-CTO • 3626-CTO, G8x • 3680-CTO • 3712-CTO • 4492-CTO • 5129-CTO • 5143-CTO • 5385-CTO • 5397-CTO • 5413-CTO • 5442-CTO • 5446-CTO	60Y3227	**

Downloaded from LpManual.com Manuals

Table 37. Parts list—Overall (continued)

No.	FRU	FRU no.	CRU ID
7	KDDI Wireless WAN Modem Adapter • 7454-CTO • 7455-CTO • 7457-CTO, 49x • 7458-CTO • 7459-CTO • 2023-CTO • 2024-CTO • 7462-CTO, 49x, 4Ax • 7465-CTO • 7466-CTO • 7469-CTO • 7470-CTO • 2046-CTO • 2047-CTO	43Y6476	**
7	Ericsson F3507g USA - Wireless WAN card • 7454-CTO, 2Gx, 2Mx, 2Nx, 2Zx, 36x, 3Xx • 7455-CTO • 7457-CTO • 7458-CTO, 5Hx, 6Bx, 6Cx, 6Yx, 7Dx, 89x, GEx, GFx • 7459-CTO • 2023-CTO • 2024-CTO • 7462-CTO, FDx, FRx, FSx • 7465-CTO • 7466-CTO • 7469-CTO, 6Jx, 9Gx, GAx • 7470-CTO • 2046-CTO • 2047-CTO	43Y6537	**
7	Ericsson F3507g Other - Wireless WAN card • 7454-CTO • 7455-CTO, 3Sx, 3Xx, 46x, 4Rx, 4Ux, 4Vx, 88x, 8Ax, 8Ex, D7x, DKx, DLx, DZx, FFx, FGx, FHx, FMx, FNx • 7457-CTO • 7458-CTO, 2Qx, 2Tx, 5Lx, 5Nx, 5Px, 5Sx, 65x, 6Vx, 7Zx, 83x, FDx, FEx, FMx, GDx • 7459-CTO • 2023-CTO • 2024-CTO • 7462-CTO • 7465-CTO • 7466-CTO, 3Tx, 3Xx, 4Xx, 5Dx, 5Ex, 96x, 9Cx, 9Ex, FVx, HEx • 7469-CTO, 5Lx, 5Mx, 5Nx, 5Px, 5Rx, 5Sx, 5Tx, 5Xx, 5Yx, 5Zx, 6Bx, 6Cx, 6Fx, 72x, 73x, 8Sx, 96x, 99x • 7470-CTO • 2046-CTO • 2047-CTO	43Y6513	**

Downloaded from LpManual.com Manuals

Table 37. Parts list—Overall (continued)

No.	FRU	FRU no.	CRU ID
7	Quanta Gobi 2000 - Wireless WAN card Malaysia SKU • 3249-CTO • 3323-CTO • 3357-CTO • 3626-CTO • 3680-CTO • 3712-CTO • 4492-CTO • 5129-CTO • 5143-CTO • 5385-CTO • 5397-CTO • 5413-CTO • 5442-CTO • 5446-CTO	60Y3259	**
8	ThinkPad 11b/g Wireless LAN Mini PCI Express Adapter III • 7454-CTO, 2Hx, 92x • 7455-CTO, 3Dx, 3Px • 7457-CTO • 7458-CTO, 53x, 5Ax, 78x, FGx, FPx, FTx • 7459-CTO, 6Lx, 6Tx • 2023-CTO • 2024-CTO • 7462-CTO, 42x, 4Xx, 4Yx, F3x, F6x, F7x • 7465-CTO, 2Lx, 2Wx, 2Xx • 7466-CTO, 3Kx, 3Mx • 7469-CTO, 7Ax • 7470-CTO, 6Ux • 2046-CTO • 2047-CTO	43Y6511	**
8	Intel Centrino Wireless-N 1000 • 7454-CTO • 7455-CTO, F9x, FCx, FEx • 7457-CTO • 7458-CTO • 7459-CTO • 2023-CTO • 2024-CTO • 7462-CTO • 7465-CTO, GAx, GBx • 7466-CTO, FJx, FKx, FLx, FMx, FXx, FYx • 7469-CTO, 93x, 94x • 7470-CTO • 2046-CTO • 2047-CTO • 3249-CTO, J5x • 3323-CTO, 45x, AJx, BPx, BRx, LGx • 3357-CTO • 3626-CTO, 1Kx, • 3680-CTO • 3712-CTO • 4492-CTO • 5129-CTO • 5143-CTO, 43x, 4Gx • 5385-CTO • 5397-CTO	60Y3203	**

Downloaded from LpManual.com Manuals

Table 37. Parts list—Overall (continued)

No.	FRU	FRU no.	CRU ID
	• 5413-CTO • 5442-CTO • 5446-CTO		
8	Condor Peak 1x2 HMC WIFI • 3249-CTO • 3323-CTO • 3357-CTO • 3626-CTO • 3680-CTO • 3712-CTO • 4492-CTO • 5129-CTO • 5143-CTO • 5385-CTO • 5397-CTO • 5413-CTO • 5442-CTO • 5446-CTO	60Y3241	**
8	EchoPeak 1X2 HMC RUSSIA SKU (WiMAX/WIFI5150) for Russia • 3249-CTO • 3323-CTO • 3357-CTO • 3626-CTO • 3680-CTO • 3712-CTO • 4492-CTO • 5129-CTO • 5143-CTO • 5385-CTO • 5397-CTO • 5413-CTO • 5442-CTO • 5446-CTO	43Y6541	**
8	Intel WiFi Link 5100 • 7454-CTO, 26x, 29x, 2Gx, 2Mx, 2Nx, 2Px, 2Rx, 2Sx, 2Wx, 2Xx, 2Yx, 2Zx, 32x, 33x, 34x, 36x, 38x, 3Jx, 3Lx, 3Mx, 3Nx, 3Rx, 3Sx, 3Vx, 3Xx, 3Yx, 3Zx, 93x, 95x, 97x, 98x, 9Gx, 9Hx, 9Jx, 9Lx, G2x, G3x, G4x, G5x, G6x, G7x, G8x, G9x, GBx, GCx, GDx, GEx, GFx, GGx, GHx, GJx, GKx, GLx, GMx, GNx, GPx • 7455-CTO, 36x, 39x, 3Ex, 3Fx, 3Kx, 3Qx, 3Rx, 3Ux, 3Vx, 3Wx, 42x, 43x, 44x, 45x, 46x, 47x, 48x, 4Bx, 4Cx, 4Dx, 4Ex, 4Fx, 4Gx, 4Nx, 4Px, 4Tx, 4Ux, 4Vx, 4Zx, 82x, 85x, 86x, 8Cx, 8Fx, 8Gx, 8Hx, 8Jx, 8Kx, 8Lx, 8Mx, 8Px, 8Qx, 8Rx, 8Sx, 8Tx, 8Ux, 8Vx, 8Wx, 8Xx, 8Yx, 8Zx, D5x, D6x, D9x, DAx, DBx, DGx, DJx, DNx, DPx, DQx, DRx, DVx, DXx, F2x, F3x, F4x, F5x, F6x, F7x, FBx, FDx, FFx, FGx, FJx, FKx, FLx, FMx, FNx, FPx, FRx, FSx, FTx, FUx, FVx, FWx, FXx, FYx, FZx, P2x, P3x, P4x, P5x, P6x, P7x, P9x, PAx, PBx, PCx, PDx, PEx, PFx, PGx, PHx, PJx • 7457-CTO, 45x, 48x, 4Ax, 4Bx, 4Gx, 4Hx, 4Jx, 4Nx, 4Px, 4Qx, 4Ux, 4Vx, 4Wx, 53x, 54x, 56x, 57x, 58x • 7458-CTO, 24x, 25x, 26x, 28x, 2Bx, 2Cx, 2Fx, 2Kx, 2Lx, 2Mx, 2Nx, 2Px, 55x, 57x, 5Dx, 5Ex, 68x, 6Ax, 6Bx, 6Cx, 6Dx, 6Ex, 6Qx, 6Rx, 6Sx, 6Xx, 6Zx, 73x, 74x, 76x, 7Cx, 7Ex, 7Fx, 7Gx, 7Hx, 7Qx, 7Rx, 7Ux, 7Wx, 7Xx, 7Yx, 88x, 8Bx, 8Cx, 8Ex, 8Fx, 8Gx, 8Hx, 8Jx, 8Kx, 8Lx, 8Mx, 8Nx, 8Px, 8Qx, 8Wx, 8Yx, E2x, F2x, F3x, F4x, F5x, F6x, F7x, FHx, FKx, FLx, FNx, FQx, FSx, FUx, FVx, FWx, FYx, G7x, G8x, G9x, M2x, X4x, X5x • 7459-CTO, 5Ex, 67x, 68x, 6Ax, 6Dx, 6Ex, 6Kx, 6Qx, 6Rx, 6Yx, 6Zx, H2x, H7x, M2x, M4x • 2023-CTO • 2024-CTO	43Y6493	**

Downloaded from LpManual.com Manuals

Table 37. Parts list—Overall (continued)

No.	FRU	FRU no.	CRU ID
	• 7462-CTO, 43x, 4Dx, 4Gx, 4Kx, 4Lx, 4Mx, 4Nx, 4Px, 4Qx, 4Rx, 4Sx, 4Tx, 4Ux, 4Vx, 4Wx, F2x, F4x, F5x, FAx, FBx, FCx, FDx, FEx, FHx, FLx, FRx, FUx, FVx • 7465-CTO, 23x, 24x, 2Ex, 2Hx, 2Mx, 2Nx, 2Px, 2Qx, 2Rx, 2Sx, 2Tx, 2Ux, 2Vx, 2Zx, 3Mx, 3Vx, D4x, D6x, D7x, D8x, D9x, DBx, DCx, DEx, DFx, DHx, DJx, G9x • 7466-CTO, 32x, 33x, 34x, 35x, 3Ax, 3Dx, 3Gx, 3Hx, 3Jx, 3Lx, 3Nx, 3Px, 3Qx, 3Rx, 3Sx, 3Vx, 3Wx, 3Zx, 43x, 44x, 45x, 4Nx, 4Px, 4Qx, 4Rx, 4Sx, 4Tx, 4Ux, 54x, 57x, 59x, 5Ax, 5Fx, 5Gx, 5Jx, 5Rx, 5Sx, 5Ux, 5Vx, 5Wx, 5Xx, 5Yx, 5Zx, 93x, 94x, 95x, 98x, 9Ax, 9Bx, 9Gx, 9Mx, 9Nx, 9Px, 9Qx, 9Rx, 9Wx, 9Xx, F8x, F9x, FAx, FBx, FPx, FQx, FRx, FVx, FWx, FZx, H3x, H4x, H6x, H7x, H8x, H9x, HAx, HBx, HCx, N2x • 7469-CTO, 52x, 53x, 58x, 5Bx, 5Ex, 5Fx, 5Gx, 5Jx, 67x, 68x, 69x, 6Ax, 6Hx, 6Jx, 6Kx, 6Lx, 6Mx, 6Nx, 6Tx, 6Ux, 6Vx, 6Wx, 75x, 76x, 77x, 78x, 7Dx, 7Ex, 7Gx, 7Jx, 7Lx, 7Mx, 7Nx, 7Qx, 7Rx, 7Sx, 7Tx, 7Ux, 7Vx, 7Zx, 83x, 84x, 86x, 8Ax, 8Gx, 8Lx, 8Nx, 8Qx, 8Tx, 8Ux, 8Vx, 8Wx, 95x, 9Cx, 9Dx, 9Ex, 9Gx, G3x, G7x, G8x, G9x, GAx, GBx, GCx • 7470-CTO, 5Gx, 62x, 64x, 69x, 6Dx, 6Gx, 6Jx, 6Kx, 6Mx, 6Nx, 6Rx, 6Tx, 6Vx, 72x, 74x, 76x, 77x, 8Ux, 8Zx, E2x • 2046-CTO • 2047-CTO		
8	Intel WiFi Link 5300 • 7454-CTO, 22x, 23x, 24x, 25x, 27x, 28x, 2Jx, 2Kx, 2Lx, 2Qx, 2Tx, 2Ux, 2Vx, 3Qx, 96x, 9Bx, 9Cx • 7455-CTO, 32x, 33x, 34x, 35x, 38x, 3Ax, 3Bx, 3Cx, 3Gx, 3Hx, 3Jx, 3Lx, 3Mx, 3Nx, 3Sx, 3Tx, 3Xx, 3Yx, 3Zx, 4Ax, 4Hx, 4Jx, 4Kx, 4Mx, 4Qx, 4Rx, 4Sx, 4Yx, 87x, 88x, 89x, 8Ax, 8Bx, 8Dx, 8Ex, D2x, D3x, D7x, D8x, DCx, DDx, DKx, DLx, DMx, DYx, DZx, FHx, FQx, N5x • 7457-CTO, 42x, 43x, 44x, 46x, 47x, 49x, 4Cx, 4Dx, 4Ex, 4Fx, 4Kx, 4Lx, 4Mx, 4Rx, 4Sx, 4Tx • 7458-CTO, 27x, 29x, 2Ax, 2Dx, 2Ex, 2Qx, 2Rx, 2Sx, 2Tx, 2Vx, 4Xx, 4Yx, 52x, 54x, 56x, 58x, 59x, 5Bx, 5Cx, 5Fx, 5Hx, 5Jx, 5Lx, 5Mx, 5Nx, 5Px, 5Qx, 5Rx, 5Sx, 5Tx, 62x, 63x, 64x, 65x, 66x, 67x, 69x, 6Jx, 6Kx, 6Lx, 6Mx, 6Nx, 6Px, 6Tx, 6Ux, 6Vx, 6Wx, 6Yx, 72x, 77x, 79x, 7Dx, 7Jx, 7Kx, 7Lx, 7Mx, 7Nx, 7Px, 7Sx, 7Tx, 7Vx, 7Zx, 82x, 83x, 84x, 85x, 86x, 87x, 89x, 8Ax, 8Dx, 8Tx, 8Xx, 8Zx, F8x, F9x, FAx, FCx, FDx, FEx, FFx, FJx, FMx, G4x, G5x, G6x, GBx, GCx, GDx, GEx, GFx, M3x • 7459-CTO, 5Fx, 62x, 63x, 64x, 65x, 66x, 69x, 6Cx, 6Fx, 6Gx, 6Jx, 6Mx, 6Nx, 6Px, 6Sx, 6Ux, 6Vx, 6Wx, 6Xx, 72x, 75x, E3x, H3x, H4x, H5x, H6x, M3x • 2023-CTO • 2024-CTO • 7462-CTO, 44x, 45x, 46x, 47x, 48x, 49x, 4Ax, 4Bx, 4Cx, 4Ex, 4Fx, 4Hx, 4Jx, 4Zx, FSx, FTx • 7465-CTO, 25x, 26x, 27x, 28x, 29x, 2Dx, 2Fx, 2Jx, 2Kx, 2Yx, 3Kx, D2x, D3x • 7466-CTO, 38x, 39x, 3Bx, 3Cx, 3Ex, 3Fx, 3Tx, 3Ux, 3Xx, 3Yx, 4Vx, 4Wx, 4Xx, 55x, 56x, 58x, 5Bx, 5Cx, 5Dx, 5Ex, 5Hx, 92x, 96x, 97x, 99x, 9Cx, 9Dx, 9Ex, 9Fx, 9Jx, 9Lx, 9Vx, FSx, FTx, HDx, HEx • 7469-CTO, 54x, 55x, 56x, 57x, 59x, 5Ax, 5Cx, 5Dx, 5Hx, 5Kx, 5Lx, 5Mx, 5Nx, 5Px, 5Qx, 5Rx, 5Sx, 5Tx, 5Ux, 5Vx, 5Wx, 5Xx, 5Yx, 5Zx, 6Bx, 6Cx, 6Dx, 6Ex, 6Fx, 6Gx, 6Px, 6Qx, 6Rx, 6Xx, 6Yx, 6Zx, 72x, 73x, 74x, 79x, 7Cx, 7Px, 82x, 85x, 87x, 88x, 89x, 8Bx, 8Cx, 8Dx, 8Ex, 8Fx, 8Hx, 8Jx, 8Kx, 8Mx, 8Px, 8Rx, 8Sx, 96x, 97x, 98x, 99x • 7470-CTO, 5Hx, 63x, 65x, 68x, 6Ax, 6Bx, 6Cx, 6Ex, 6Fx, 6Hx, 6Lx, 6Qx, 75x, 8Tx • 2046-CTO • 2047-CTO	43Y6495	**

Downloaded from LpManual.com Manuals

Table 37. Parts list—Overall (continued)

No.	FRU	FRU no.	CRU ID
8	Intel WiMAX/WiFi Link 5150 • 7454-CTO, 3Hx, 3Kx, 3Wx • 7455-CTO, 4Lx, 8Nx, DSx, DTx • 7457-CTO • 7458-CTO, FXx, G3x • 7459-CTO • 2023-CTO • 2024-CTO • 7462-CTO • 7465-CTO, 3Lx • 7466-CTO, 46x • 7469-CTO • 7470-CTO • 2046-CTO • 2047-CTO		
	Japan	60Y3197	**
	Other than Japan	43Y6539	**
8	Intel WiMAX/WiFi Link 5350 • 7454-CTO, 9Fx • 7455-CTO • 7457-CTO • 7458-CTO, 7Bx, 8Rx, 8Sx • 7459-CTO, 6Bx • 2023-CTO • 2024-CTO • 7462-CTO • 7465-CTO • 7466-CTO • 7469-CTO, 7Yx • 7470-CTO • 2046-CTO • 2047-CTO	43Y6533	**
8	ThinkPad 11b/g/n Wireless LAN Mini-PCI Express Adapter II • 7454-CTO, 3Px, 3Tx • 7455-CTO, 49x, 4Wx, 4Xx, 83x, 84x, DEx, DFx, DHx, DUx, DWx, N2x, N3x, N4x • 7457-CTO, 52x, 55x • 7458-CTO, 22x • 7459-CTO, 73x, 74x • 2023-CTO • 2024-CTO • 7462-CTO, 22x, 23x, 24x, 25x, 26x, 27x, 28x, 29x, 2Ax, 2Bx, 2Cx, 2Dx, 2Ex, 2Fx, 2Gx, 2Hx, F8x, F9x, FFx, FGx, FJx, FKx, FMx, FNx, FPx, FQx • 7465-CTO, 3Jx, 3Nx, 3Px, 3Rx, 3Sx, 3Tx, 3Ux, 3Wx, 3Xx, 3Yx, 3Zx, DAx, DDx, DGx, DKx, G2x, G3x, G4x, G5x, G6x, G7x, G8x • 7466-CTO, 47x, 48x, 49x, 4Ax, 4Bx, 4Cx, 4Dx, 4Ex, 4Fx, 4Hx, 4Jx, 4Kx, 4Lx, 4Mx, 4Yx, 4Zx, 52x, 53x, 5Kx, 5Lx, 5Mx, 5Nx, 5Px, 5Qx, 5Tx, 9Hx, 9Kx, 9Sx, 9Tx, 9Ux, 9Yx, 9Zx, DLx, DMx, F2x, F3x, F4x, F5x, F6x, F7x, FCx, FDx, FEx, FFx, FGx, FHx, FNx, FUx, H2x, H5x • 7469-CTO, 62x, 63x, 64x, 65x, 66x, 7Bx, 7Fx, 7Hx, 7Kx, 7Xx, 8Xx, 8Yx, 8Zx, 9Ax, 9Bx, E2x, G2x, G4x, G5x, G6x • 7470-CTO, 6Px, 6Sx, 73x • 2046-CTO • 2047-CTO • 3249-CTO, MTx • 3323-CTO • 3357-CTO	43Y6553	N

Downloaded from LpManual.com Manuals

Table 37. Parts list—Overall (continued)

No.	FRU	FRU no.	CRU ID
	• 3626-CTO • 3680-CTO • 3712-CTO • 4492-CTO • 5129-CTO • 5143-CTO, 42x, 4Nx, 4Px • 5385-CTO • 5397-CTO • 5413-CTO • 5442-CTO • 5446-CTO		
8	ThinkPad 11b/g/n Wireless LAN Mini-PCI Express Adapter II • 7454-CTO, 3Px, 3Tx • 7455-CTO, 49x, 4Wx, 4Xx, 83x, 84x, DEx, DFx, DHx, DUx, DWx, N2x, N3x, N4x • 7457-CTO, 52x, 55x • 7458-CTO, 22x • 7459-CTO, 73x, 74x • 2023-CTO • 2024-CTO • 7462-CTO, 22x, 23x, 24x, 25x, 26x, 27x, 28x, 29x, 2Ax, 2Bx, 2Cx, 2Dx, 2Ex, 2Fx, 2Gx, 2Hx, F8x, F9x, FFx, FGx, FJx, FKx, FMx, FNx, FPx, FQx • 7465-CTO, 3Jx, 3Nx, 3Px, 3Rx, 3Sx, 3Tx, 3Ux, 3Wx, 3Xx, 3Yx, 3Zx, DAx, DDx, DGx, DKx, G2x, G3x, G4x, G5x, G6x, G7x, G8x • 7466-CTO, 47x, 48x, 49x, 4Ax, 4Bx, 4Cx, 4Dx, 4Ex, 4Fx, 4Hx, 4Jx, 4Kx, 4Lx, 4Mx, 4Yx, 4Zx, 52x, 53x, 5Kx, 5Lx, 5Mx, 5Nx, 5Px, 5Qx, 5Tx, 9Hx, 9Kx, 9Sx, 9Tx, 9Ux, 9Yx, 9Zx, DLx, DMx, F2x, F3x, F4x, F5x, F6x, F7x, FCx, FDx, FEx, FFx, FGx, FHx, FNx, FUx, H2x, H5x • 7469-CTO, 62x, 63x, 64x, 65x, 66x, 7Bx, 7Fx, 7Hx, 7Kx, 7Xx, 8Xx, 8Yx, 8Zx, 9Ax, 9Bx, E2x, G2x, G4x, G5x, G6x • 7470-CTO, 6Px, 6Sx, 73x • 2046-CTO • 2047-CTO • 3249-CTO, MTx • 3323-CTO • 3357-CTO • 3626-CTO • 3680-CTO • 3712-CTO • 4492-CTO • 5129-CTO • 5143-CTO, 42x, 4Nx, 4Px • 5385-CTO • 5397-CTO • 5413-CTO • 5442-CTO • 5446-CTO	60Y3177	N

Downloaded from LpManual.com Manuals

Table 37. Parts list—Overall (continued)

No.	FRU	FRU no.	CRU ID
8	Intel Centrino Advanced-N 6200 • 3249-CTO,2Gx, 2Hx, 2Nx, 2Px, 2Ux, 2Vx, 32x, 3Rx • 3323-CTO, 1Px, 43x, 46x, 48x, 4Jx, 59x, 5Ax, 84x, 8Gx, 8Jx, 8Kx, 8Lx, 8Nx, 8Px, 8Tx, 8Ux, 8Xx, 8Yx, A9x, AEx, AFx, AKx, ALx, CVx, CXx, CZx, DLx, DMx, E8x, EEx, EGx, EJx, EUx, EWx, EXx, KAx, KCx, KDx, KEx, KFx, KGx, KHx, KMx, KNx, KSx, KTx, PSx, PTx, QEx • 3357-CTO • 3626-CTO, F3x, F5x, FRx, FSx, FWx, H9x, QGx, QHx • 3680-CTO • 3712-CTO • 4492-CTO • 5129-CTO, 72x, 73x, 74x, 75x, 76x, 77x, 78x • 5143-CTO, 22x, 24x, 26x, 27x, 28x, 29x, 2Ax, 2Dx, 2Ex, 2Hx, 2Jx, 2Mx, 2Nx, 2Sx, 2Tx, 2Wx, 2Yx, 33x, 34x, 37x, 38x, 3Ux, 3Wx, 3Zx, 4Cx, 4Dx, 4Ex, 4Hx, 4Kx • 5385-CTO, D4x, D5x, D6x, D7x, D8x, D9x • 5397-CTO, F4x, F5x, F9x, FAx, FDx, FEx, FFx, FGx, FKx, FMx, FNx, FSx, FUx, FWx, FYx, G2x, G4x, G6x, G7x, GAx, GBx, GCx, GEx, GFx, GGx • 5413-CTO, FDx, FEx, FFx, FGx, L2x, L4x, L6x, L7x, L8x, LAx, LBx • 5442-CTO • 5446-CTO	60Y3231	N
8	Intel Centrino Ultimate-N 6300 • 3249-CTO, 28x • 3323-CTO, 4Cx, 4Dx, 4Px, 4Tx, 7Fx, 7Gx, 7Kx, 7Lx, 7Px, 7Rx, 7Ux, 7Vx, 88x, 8Ax, 9Dx, 9Fx, 9Gx, 9Zx, ACx, L3x, L6x, MAx, MBx, RDx, REx, RFx, RGx, RHx, RJx, RKx, RLx • 3357-CTO, D3x, D7x • 3626-CTO, F7x, FZx, G8x, GVx, GWx, H8x, HAx, PWx • 3680-CTO, F7x, H8x, HAx, P6x, PBx, Q7x • 3712-CTO • 4492-CTO • 5129-CTO • 5143-CTO, 23x, 25x, 3Vx, 3Yx, 44x, 45x, 46x, 47x, 48x, 49x, 4Ax, 4Bx, 4Jx, 4Lx, 4Mx • 5385-CTO • 5397-CTO, F6x, F7x, F8x, FBx, FCx, FPx, FRx, G3x, G5x, G8x, G9x, GDx • 5413-CTO, L3x, L5x, L9x • 5442-CTO • 5446-CTO	60Y3233	N
8	Intel Centrino Advanced-N + WiMAx, 6250 • 3249-CTO, 2Tx • 3323-CTO, 7Hx, 7Jx, 7Mx, 7Nx, 7Sx, 7Tx, 7Wx, 7Xx, PUx • 3357-CTO • 3626-CTO • 3680-CTO • 3712-CTO • 4492-CTO • 5129-CTO, R1x • 5143-CTO, 2Bx, 2Cx, 2Fx, 2Gx, 2Kx, 2Lx, 2Px, 2Rx, 2Ux, 2Vx, 2Zx, 32x, 35x, 36x, 39x, 3Ax • 5385-CTO, D2x, D3x • 5397-CTO, F2x, F3x, FHx, FJx, FTx, FVx, FXx, FZx • 5413-CTO • 5442-CTO • 5446-CTO		
	Russia	60Y3209	N
	Other than Russia	60Y3195	N

Downloaded from LpManual.com Manuals

Table 37. Parts list—Overall (continued)

No.	FRU	FRU no.	CRU ID
9	I/O card assembly with modem connector, with 5-in-1 Media Card Reader slot, with audio ports • 7454-CTO, 22x, 23x, 24x, 25x, 26x, 27x, 28x, 29x, 2Gx, 2Jx, 2Kx, 2Lx, 2Mx, 2Nx, 2Px, 2Qx, 2Rx, 2Sx, 2Tx, 2Ux, 2Vx, 2Wx, 2Xx, 2Yx, 2Zx, 32x, 33x, 34x, 36x, 38x, 3Lx, 3Mx, 3Nx, 3Px, 3Qx, 3Rx, 3Sx, 3Vx, 3Wx, 3Xx, 93x, 95x, 96x, 97x, 98x, 9Bx, 9Cx, 9Fx, 9Gx, 9Hx, 9Jx, G4x, G5x, G6x, G7x, G8x, G9x, GBx, GEx, GKx, GLx, GMx • 7455-CTO, 32x, 33x, 34x, 35x, 36x, 38x, 39x, 3Ax, 3Bx, 3Cx, 3Ex, 3Fx, 3Gx, 3Hx, 3Jx, 3Kx, 3Lx, 3Mx, 3Nx, 3Qx, 3Rx, 3Sx, 3Tx, 3Ux, 3Vx, 3Wx, 3Xx, 3Yx, 3Zx, 42x, 43x, 44x, 45x, 46x, 47x, 48x, 49x, 4Ax, 4Bx, 4Cx, 4Dx, 4Ex, 4Fx, 4Gx, 4Hx, 4Jx, 4Kx, 4Lx, 4Mx, 4Nx, 4Px, 4Qx, 4Rx, 4Sx, 4Tx, 4Ux, 4Vx, 4Wx, 4Xx, 4Yx, 4Zx, 82x, 83x, 84x, 85x, 86x, 87x, 88x, 89x, 8Ax, 8Bx, 8Cx, 8Dx, 8Ex, 8Fx, 8Gx, 8Hx, 8Jx, 8Kx, 8Lx, 8Mx, 8Nx, 8Px, 8Qx, 8Rx, 8Sx, 8Tx, 8Ux, 8Vx, 8Wx, 8Xx, 8Yx, 8Zx, D2x, D3x, D5x, D6x, D7x, D8x, D9x, DBx, DCx, DDx, DFx, DHx, DJx, DKx, DLx, DMx, DNx, DPx, DQx, DRx, DSx, DTx, DUx, DVx, DWx, DXx, DYx, DZx, F2x, F7x, F9x, FBx, FCx, FDx, FEx, FFx, FGx, FHx, FJx, FKx, FLx, FMx, FNx, FPx, FQx, FRx, FSx, FYx, FZx, N2x, N3x, N4x, N5x, P2x, P3x, P4x, P5x, P6x, P7x, PAx, PBx, PCx, PDx, PEx, PFx, PGx, PHx, PJx • 7457-CTO, 42x, 43x, 44x, 45x, 46x, 47x, 48x, 49x, 4Cx, 4Dx, 4Ex, 4Fx, 4Jx, 4Kx, 4Lx, 4Mx, 4Nx, 4Px, 4Qx, 4Rx, 4Sx, 4Tx • 7458-CTO, 22x, 24x, 25x, 26x, 27x, 28x, 29x, 2Ax, 2Bx, 2Cx, 2Dx, 2Ex, 2Fx, 2Kx, 2Lx, 2Mx, 2Nx, 2Px, 2Qx, 2Rx, 2Sx, 2Tx, 2Vx, 4Xx, 4Yx, 52x, 53x, 54x, 55x, 56x, 57x, 58x, 59x, 5Ax, 5Bx, 5Cx, 5Dx, 5Ex, 5Fx, 5Hx, 5Jx, 5Lx, 5Mx, 5Nx, 5Px, 5Qx, 5Rx, 5Sx, 5Tx, 62x, 63x, 64x, 65x, 66x, 67x, 68x, 69x, 6Ax, 6Bx, 6Cx, 6Dx, 6Ex, 6Jx, 6Kx, 6Lx, 6Mx, 6Nx, 6Px, 6Qx, 6Rx, 6Sx, 6Tx, 6Ux, 6Vx, 6Wx, 6Xx, 6Yx, 6Zx, 72x, 73x, 74x, 76x, 77x, 79x, 7Bx, 7Cx, 7Dx, 7Ex, 7Fx, 7Gx, 7Hx, 7Jx, 7Kx, 7Lx, 7Mx, 7Nx, 7Px, 7Qx, 7Sx, 7Tx, 7Ux, 7Vx, 7Zx, 82x, 83x, 84x, 85x, 86x, 87x, 88x, 89x, 8Ax, 8Bx, 8Cx, 8Ex, 8Fx, 8Gx, 8Hx, 8Jx, 8Kx, 8Lx, 8Mx, 8Nx, 8Px, 8Rx, 8Sx, 8Tx, 8Wx, 8Xx, 8Yx, 8Zx, E2x, F2x, F3x, F4x, F5x, F8x, F9x, FAx, FCx, FDx, FEx, FFx, FGx, FHx, FJx, FKx, FLx, FMx, FNx, FPx, FQx, FSx, FTx, FUx, FVx, FWx, FXx, FYx, G3x, G4x, G5x, G6x, G7x, G8x, G9x, GBx, GCx, GDx, GEx, GFx, M2x, M3x, X4x, X5x • 7459-CTO, 5Fx, 63x, 64x, 66x, 67x, 68x, 6Ax, 6Bx, 6Cx, 6Dx, 6Ex, 6Fx, 6Gx, 6Jx, 6Kx, 6Mx, 6Nx, 6Px, 6Qx, 6Rx, 6Sx, 6Tx, 6Vx, 6Wx, 6Yx, 6Zx, 72x, 73x, 74x, 75x, E3x, H2x, H3x, H4x, H5x, H6x, H7x, M2x, M3x, M4x • 2023-CTO • 2024-CTO	42W8011	N
9	I/O card assembly with modem connector, with 5-in-1 Media Card Reader slot, with audio ports • 7462-CTO, 22x, 23x, 24x, 25x, 26x, 27x, 28x, 29x, 2Ax, 2Bx, 2Gx, 2Hx, 43x, 44x, 45x, 46x, 47x, 48x, 49x, 4Ax, 4Bx, 4Cx, 4Dx, 4Ex, 4Fx, 4Gx, 4Hx, 4Jx, 4Kx, 4Lx, 4Mx, 4Nx, 4Px, 4Qx, 4Rx, 4Sx, 4Tx, 4Ux, 4Vx, 4Xx, 4Yx, 4Zx, F2x, F3x, F4x, F6x, F7x, F8x, F9x, FHx, FLx, FQx, FRx, FSx, FTx, FUx, FVx • 7465-CTO, 23x, 24x, 25x, 26x, 27x, 28x, 29x, 2Dx, 2Ex, 2Fx, 2Hx, 2Jx, 2Kx, 2Lx, 2Mx, 2Nx, 2Px, 2Qx, 2Rx, 2Sx, 2Tx, 2Ux, 2Vx, 2Yx, 2Zx, 3Jx, 3Kx, 3Lx, 3Mx, 3Nx, 3Px, 3Rx, 3Ux, 3Vx, 3Wx, 3Xx, 3Yx, 3Zx, D2x, D3x, D6x, D7x, D8x, D9x, DAx, DBx, DCx, DDx, DEx, DFx, G2x, G3x, G4x, G5x, G6x, G7x, G8x, G9x, GAx, GBx • 7466-CTO, 32x, 33x, 34x, 35x, 38x, 39x, 3Ax, 3Bx, 3Cx, 3Dx, 3Ex, 3Fx, 3Gx, 3Hx, 3Jx, 3Lx, 3Nx, 3Px, 3Qx, 3Rx, 3Sx, 3Tx, 3Ux, 3Vx, 3Wx, 3Xx, 3Yx, 3Zx, 43x, 44x, 45x, 46x, 47x, 48x, 49x, 4Ax, 4Bx, 4Cx, 4Dx, 4Ex, 4Fx, 4Hx, 4Jx, 4Kx, 4Lx, 4Mx, 4Nx, 4Px, 4Qx, 4Rx, 4Sx, 4Tx, 4Ux, 4Vx, 4Wx, 4Xx, 4Yx, 4Zx, 52x, 53x, 54x, 55x, 56x, 57x, 58x, 59x, 5Ax, 5Bx, 5Cx, 5Dx, 5Ex, 5Fx, 5Gx, 5Hx, 5Jx, 5Kx, 5Lx, 5Mx, 5Nx, 5Px, 5Qx, 5Rx, 5Sx, 5Tx, 5Ux, 5Vx, 5Wx, 5Xx, 5Yx, 5Zx, 92x, 93x, 94x, 95x, 96x, 97x, 98x, 99x, 9Ax, 9Cx, 9Dx, 9Ex, 9Fx, 9Gx, 9Jx, 9Lx, 9Mx, 9Nx, 9Px, 9Qx, 9Rx, 9Tx, 9Ux, 9Vx, 9Wx, 9Xx, 9Yx, 9Zx, DLx, F2x, F3x, F4x, F5x, F6x, F7x, F8x, F9x, FAx, FBx, FCx, FDx, FEx, FFx, FGx, FHx, FJx, FKx, FLx, FMx, FNx, FPx, FQx, FRx, FSx, FTx, FUx, FVx, FWx, FXx, FYx, FZx, H2x, H3x, H4x, H5x, H6x, H7x, H8x, H9x, HBx, HCx, HDx, HEx, N2x • 7469-CTO, 52x, 53x, 54x, 55x, 56x, 57x, 59x, 5Ax, 5Bx, 5Cx, 5Dx, 5Gx, 5Hx, 5Jx, 5Kx, 5Lx, 5Mx, 5Nx, 5Px, 5Qx, 5Rx, 5Sx, 5Tx, 5Ux, 5Vx, 5Wx, 5Xx, 5Yx, 5Zx, 62x, 63x, 64x, 65x, 66x, 67x, 68x, 69x, 6Ax, 6Bx, 6Cx, 6Dx, 6Ex, 6Fx, 6Gx, 6Hx, 6Jx, 6Kx, 6Lx, 6Mx, 6Nx,	42W8011	N

Downloaded from LpManual.com Manuals

Table 37. Parts list—Overall (continued)

No.	FRU	FRU no.	CRU ID
	6Px, 6Qx, 6Rx, 6Tx, 6Ux, 6Vx, 6Wx, 6Xx, 6Yx, 6Zx, 72x, 73x, 74x, 75x, 76x, 77x, 78x, 79x, 7Ax, 7Bx, 7Cx, 7Dx, 7Ex, 7Gx, 7Jx, 7Lx, 7Mx, 7Nx, 7Qx, 7Rx, 7Sx, 7Tx, 7Ux, 7Vx, 7Yx, 7Zx, 82x, 83x, 84x, 85x, 86x, 87x, 88x, 89x, 8Ax, 8Bx, 8Cx, 8Dx, 8Ex, 8Fx, 8Gx, 8Hx, 8Jx, 8Kx, 8Mx, 8Nx, 8Px, 8Qx, 8Rx, 8Sx, 8Tx, 8Ux, 8Vx, 8Wx, 8Xx, 8Yx, 8Zx, 93x, 94x, 95x, 96x, 97x, 98x, 99x, 9Ax, 9Bx, 9Cx, 9Dx, 9Ex, 9Gx, E2x, G2x, G3x, G4x, G5x, G6x, G7x, G8x, G9x, GAx, GBx, GCx • 7470-CTO, 5Gx, 5Hx, 62x, 63x, 65x, 68x, 6Ax, 6Bx, 6Cx, 6Dx, 6Ex, 6Fx, 6Gx, 6Hx, 6Jx, 6Kx, 6Lx, 6Mx, 6Nx, 6Px, 6Qx, 6Rx, 6Sx, 6Tx, 6Vx, 72x, 73x, 74x, 75x, 76x, 77x, 8Tx, 8Ux, 8Zx, E2x • 2046-CTO • 2047-CTO		
9	I/O card assembly without modem connector, with 3-in-1 Media Card Reader slot, with audio ports • 7454-CTO, 2Hx, 3Hx, 3Jx, 3Kx, 3Tx, 3Yx, 3Zx, 92x, 9Lx, G2x, G3x, GCx, GDx, GFx, GGx, GHx, GJx, GNx, GPx • 7455-CTO, 3Dx, 3Px, DAx, DEx, DGx, F3x, F4x, F5x, F6x, FTx, FUx, FVx, FWx, FXx, P9x • 7457-CTO, 4Ax, 4Bx, 4Gx, 4Hx, 4Ux, 4Vx, 4Wx, 52x, 53x, 54x, 55x, 56x, 57x, 58x • 7458-CTO, 78x, 7Rx, 7Wx, 7Xx, 7Yx, 8Dx, 8Qx, F6x, F7x • 7459-CTO, 5Ex, 62x, 65x, 69x, 6Lx, 6Ux • 2023-CTO • 2024-CTO • 7462-CTO, 2Cx, 2Dx, 2Ex, 2Fx, 42x, 4Wx, F5x, FAx, FBx, FCx, FDx, FEx, FFx, FGx, FJx, FKx, FMx, FNx, FPx • 7465-CTO, 2Wx, 2Xx, 3Sx, 3Tx, D4x, DGx, DHx, DJx, DKx • 7466-CTO, 3Kx, 3Mx, 9Bx, 9Hx, 9Kx, 9Sx, DMx, HAx • 7469-CTO, 58x, 5Ex, 5Fx, 7Fx, 7Hx, 7Kx, 7Px, 7Xx, 8Lx • 7470-CTO, 64x, 69x, 6Ux • 2046-CTO • 2047-CTO	42W8012	N
9	I/O card assembly with modem connector, with 5-in-1 Media Card Reader slot, with audio ports • 3249-CTO, 22x, 23x, 24x, 25x, 26x, 27x, 28x, 29x, 2Ax, 2Bx, 2Cx, 2Dx, 2Ex, J2x, 2Fx, 2Gx, 2Hx, 2Jx, 2Kx, 2Lx, J3x, J4x, J5x, J6x, J7x, J8x, 2Nx, J9x, JAx, 2Mx, 2Rx, 2Px, 2Sx, 2Tx, 2Ux, 2Vx, NRx, NSx, NTx, Nux, JQx, JRx, JSx, JTx, JUx, 32x, 3Rx, 33x, 3Sx, 34x, 3Tx, 35x, 3Ux, 36x, 3Vx, 37x, 3Wx, 38x, C2x, MCx, C3x, MDx, MGx, MHx, MJx, MKx, MLx, MMx, MNx, MPx, MRx, MSx, MTx, 3Xx, C8x, CKx, CHx, CMx, CNx, CPx, CRx, CSx, CTx, CUx, CJx, CLx, DFx, 3Yx, EPx, ERx, ESx, DCx, DDx, DEx, DGx, DHx, DJx, ENx, QBx, QC+ QD+ QA+ Q9+ 19x, 1Ax, 1Bx, 1Cx, 1Dx, 1Ex, 1Fx, 1Gx, 1Hx, 1Jx • 3323-CTO, 12x, 1Lx, 1Mx, 1Nx, 1Px, 1Rx, 1Sx, 1Tx, 1Yx, 1Zx, 3Qx, 3Zx, 42x, 43x, 44x, 45x, 46x, 48x, 49x, 4Ax, 4Cx, 4Dx, 4Ex, 4Fx, 4Gx, 4Hx, 4Jx, 4Kx, 4Lx, 4Mx, 4Nx, 4Px, 4Rx, 4Sx, 4Tx, 4Ux, 4Vx, 4Wx, 4Yx, 4Zx, 52x, 53x, 54x, 55x, 56x, 57x, 58x, 59x, 5Ax, 5Bx, 5Cx, 5Dx, 5Ex, 5Fx, 5Gx, 5Hx, 5Jx, 5Kx, 5Lx, 5Mx, 5Nx, 5Px, 5Rx, 5Sx, 5Tx, 5Ux, 5Vx, 5Wx, 5Yx, 5Zx, 62x, 63x, 64x, 65x, 66x, 67x, 68x, 69x, 6Ax, 6Bx, 6Cx, 6Dx, 6Ex, 6Fx, 6Gx, 6Hx, 6Jx, 6Kx, 6Lx, 6Mx, 6Nx, 6Px, 6Rx, 6Sx, 6Tx, 6Ux, 6Vx, 6Wx, 6Yx, 6Zx, 72x, 73x, 74x, 75x, 76x, 77x, 78x, 79x, 7Ax, 7Bx, 7Cx, 7Dx, 7Ex, 7Fx, 7Gx, 7Hx, 7Jx, 7Kx, 7Lx, 7Mx, 7Nx, 7Px, 7Rx, 7Sx, 7Tx, 7Ux, 7Vx, 7Wx, 7Xx, 7Yx, 7Zx, 82x, 83x, 84x, 85x, 86x, 87x, 88x, 89x, 8Ax, 8Bx, 8Cx, 8Dx, 8Ex, 8Fx, 8Gx, 8Jx, 8Kx, 8Lx, 8Nx, 8Px, 8Rx, 8Sx, 8Tx, 8Ux, 8Vx, 8Wx, 8Xx, 8Yx, 8Zx, 92x, 93x, 94x, 95x, 96x, 97x, 98x, 99x, 9Ax, 9Bx, 9Cx, 9Dx, 9Ex, 9Fx, 9Gx, 9Hx, 9Jx, 9Kx, 9Lx, 9Mx, 9Nx, 9Px, 9Rx, 9Sx, 9Tx, 9Ux, 9Vx, 9Wx, 9Yx, 9Zx, A2x, A3x, A4x, A5x, A6x, A7x, A8x, A9x, AAx, ABx, ACx, ADx, AEx, AFx, AGx, AHx, AJx, AKx, ALx, AMx, ANx, APx, ARx, ASx, ATx, AUx, AVx, AWx, AXx, AYx, AZx, B2x, B3x, B4x, B5x, B6x, B7x, B8x, BCx, BDx, BEx, BFx, BGx, BHx, BJx, BKx, BLx, BMx, BNx, BPx, BRx, BSx, BTx, BUx, BVx, BWx, BXx, BYx, BZx, C4x, C5x, C6x, C7x, C9x, CAx, CVx, CWx, CXx, CYx, CZx, D8x, D9x, DAx, DBx, DKx, DLx, DMx, DNx, DPx, DRx, DSx, DTx, DUx, DVx, DWx, DXx, DYx, DZx, E2x, E3x, E4x, E5x, E6x, E7x, E8x, E9x, EAx, EBx, EEx, EFx, EGx, EHx, EJx, EKx, ELx, EMx, ETx, EUx, EVx, EWx, EXx, EYx, EZx, JBx, JCx, JDx, JEx, K2x, K3x,	60Y5407	N

Downloaded from LpManual.com Manuals

Table 37. Parts list—Overall (continued)

No.	FRU	FRU no.	CRU ID
	K4x, K5x, K6x, K7x, K8x, K9x, KAx, KCx, KDx, KEx, KFx, KGx, KHx, KJx, KLx, KMx, KNx, KPx, KRx, KSx, KTx, KUx, KVx, KWx, KYx, KZx, L2x, L3x, L4x, L5x, L6x, L7x, L8x, LAx, LBx, LCx, LDx, LEx, LFx, LGx, LHx, LJx, LKx, LLx, LPx, LRx, LSx, LTx, LUx, LVx, LWx, LXx, LYx, LZx, M2x, M5x, M6x, M7x, M8x, M9x, MAx, MBx, MEx, MFx, N6x, N7x, N8x, N9x, NAx, NBx, NCx, NDx, NEx, NFx, NGx, NHx, NJx, NKx, NLx, NWx, NXx, NYx, NZx, PMx, PNx, PPx, PRx, PSx, PTx, PUx, Qex, QU+ QVx, QWx, QXx, QYx, QZ+ R2x, RAx, RBx, RCx, RDx, REx, RFx, RGx, RHx, RJx, RKx, RLx, RNx, RPx, RRx, RSx • 3357-CTO, D2x, D3x, D4x, D5x, D6x, D7x, LMx • 3626-CTO, 11x, 12x, 13x, 14x, 15x, 16x, 17x, 18x, 19x, 1Kx, F2x, F3x, F4x, F5x, F6x, F7x, F8x, F9x, FAx, FBx, FCx, FDx, FEx, FFx, FGx, FHx, FJx, FKx, FMx, FNx, FPx, FRx, FSx, FUx, FVx, FWx, FYx, FZx, G2x, G3x, G4x, G5x, G6x, G7x, G8x, G9x, GAx, GBx, GCx, GDx, GEx, GFx, GHx, GJx, GKx, GLx, GMx, GNx, GPx, GRx, GSx, GTx, GUx, GVx, GWx, GXx, GYx, GZx, H2x, H3x, H4x, H5x, H6x, H7x, H8x, H8x, H9x, H9x, HAx, HBx, HCx, HDx, HEx, HFx, HGx, HHx, HJx, HKx, HLx, HMx, HUx, HVx, HWx, HXx, Hyx, HZx, PVx, PWx, PXx, PYx, PZx, Q2x, Q3x, Q4x, Q5x, QFx, QGx, QHx, QJ+ QK+ QSx, QTx, R3x, R4x, R5x, R6x, R7x, R8x, R9x, RMx, RTx, RUx, RVx, RWx, RXx, N2x, RYx, RZx, Q8x • 3680-CTO, 11x, 14x, 4Q+ F7x, F8x, F9x, FAx, FBx, H8x, H9x, HAx, HBx, HCx, HNx, HPx, HQx, HRx, HSx, HTx, P2x, P3x, P4x, P5x, P6x, PJx, P7x, P8x, P9x, PAx, PBx, PCx, PDx, PEx, PFx, PGx, PHx, PKx, PLx, Q6x, Q7x, N2x • 3712-CTO • 4492-CTO • 5129-CTO, R1x, 72x, 73x, 74x, 75x, 76x, 77x, 78x • 5143-CTO, 22x, 23x, 24x, 25x, 26x, 27x, 28x, 29x, 2Ax, 2Bx, 2Cx, 2Dx, 2Ex, 2Fx, 2Gx, 2Hx, 2Jx, 2Kx, 2Lx, 2Mx, 2Nx, 2Px, 2Rx, 2Sx, 2Tx, 2Ux, 2Vx, 2Wx, 2Yx, 2Zx, 32x, 33x, 34x, 35x, 36x, 37x, 38x, 39x, 3Ax, 3Ux, 3Vx, 3Wx, 3Yx, 3Zx, 42x, 43x, 44x, 45x, 46x, 47x, 48x, 49x, 4Ax, 4Bx, 4Cx, 4Dx, 4Ex, 4Gx, 4Hx, 4Jx, 4Kx, 4Lx, 4Mx • 5385-CTO, D2x, D3x, D4x, D5x, D6x, D7x, D8x, D9x • 5397-CTO, F2x, F3x, F4x, F5x, F6x, F7x, F8x, F9x, FAx, FBx, FCx, FDx, FEx, FFx, FGx, FHx, FJx, FNx, FSx, FTx, FUx, FVx, FWx, FXx, FYx, FZx, G2x, G3x, G4x, G5x, G6x, G7x, G8x, G9x, GAx, GBx, GCx, GDx, GEx, GFx, GGx • 5413-CTO, FDx, FEx, FFx, FGx, L2x, L3x, L4x, L5x, L6x, L7x, L8x, L9x, LAx, LBx • 5442-CTO • 5446-CTO		
9	I/O card assembly without modem connector, with 3-in-1 Media Card Reader slot, with audio ports • 3249-CTO, 3Cx, 3Dx, 3Ex, 3Fx, 3Gx, 3Hx, 3Jx, 3Kx, 3Lx, 3Mx, 3Nx, CBx, CCx, CDx, CEx, CFx, CGx, QLx, QMx, QNx, QPx, QRx • 3323-CTO, 1Ux, 1Vx, 1Wx, 1Xx, B9x, BAx, BBx, JVx, JWx, JXx, JYx, JZx, M3x, M4x, N2x, N3x, N4x, N5x, NNx, NPx • 3357-CTO, 3Px, LNx • 3626-CTO, FLx, FTx, FXx, R4x, R5x, R6x • 3680-CTO • 3712-CTO • 4492-CTO • 5129-CTO • 5143-CTO, 4Nx, 4Px • 5385-CTO • 5397-CTO, FKx, FMx, FPx, FRx • 5413-CTO • 5442-CTO • 5446-CTO	60Y5408	N
10	DC-in cable assembly	44C5396	N

Downloaded from LpManual.com Manuals

Table 37. Parts list—Overall (continued)

No.	FRU	FRU no.	CRU ID
11	Battery pack, 4 cell, 47 • 7454-CTO, 26x, 29x, 2Lx, 2Qx, 2Wx, 2Xx, 2Yx, 3Rx, 95x, 97x, 9Bx, 9Cx, 9Fx, G4x, G5x, G6x, G7x, G8x, G9x, GLx, GMx • 7455-CTO, 36x, 3Kx, 4Bx, 4Cx, 4Dx, 4Ex, 4Fx, 4Gx, 4Hx, 4Jx, 4Kx, 4Lx, 4Mx, 4Nx, 4Px, 8Nx, 8Vx, 8Wx, 8Xx, 8Yx, 8Zx, D6x, DSx, DTx, FZx, P2x, P3x, P4x, P5x • 7457-CTO, 45x, 48x, 4Ax, 4Bx, 4Gx, 4Hx, 4Jx, 4Nx, 4Px, 4Qx, 4Rx, 4Sx, 4Tx, 4Ux, 4Vx, 4Wx • 7458-CTO, 24x, 25x, 2Fx, 2Kx, 2Lx, 2Mx, 2Nx, 2Px, 54x, 59x, 5Ax, 5Bx, 5Cx, 5Jx, 69x, 7Fx, 7Gx, 7Hx, 7Jx, 7Kx, 7Lx, 7Mx, 7Sx, 7Wx, 7Xx, 7Yx, 7Zx, 8Ex, F2x, F3x, F4x, F5x, F6x, F7x, F8x, F9x, FHx, FLx, FMx, FNx, FPx, FYx, G3x • 7459-CTO, 5Ex, 62x, 67x, 69x, 6Gx, 6Vx, 6Xx, H3x • 2023-CTO • 2024-CTO • 7462-CTO, 42x, 46x, 47x, 48x, 4Jx, 4Mx, 4Qx, 4Rx, 4Sx, 4Tx, 4Ux, 4Vx, 4Wx, 4Xx, 4Yx, F2x, F3x, F4x, F5x, F6x, F7x, F8x, F9x, FAx, FBx, FCx, FDx, FEx, FFx, FGx, FHx, FJx, FLx, FNx, FPx, FRx, FSx • 7465-CTO, 23x, 24x, 2Ex, 2Hx, 2Mx, 2Nx, 2Px, 2Qx, 2Rx, 2Sx, 2Tx, 2Ux, 2Vx, 2Zx, 3Mx, 3Nx, 3Px, 3Rx, 3Vx, 3Wx, D4x, G5x, G6x, G7x • 7466-CTO, 34x, 35x, 3Ax, 3Dx, 3Tx, 3Ux, 45x, 47x, 48x, 49x, 4Ax, 4Bx, 4Cx, 4Dx, 4Ex, 4Fx, 4Hx, 4Jx, 4Kx, 4Lx, 4Mx, 4Nx, 4Px, 4Qx, 4Rx, 4Sx, 4Tx, 4Ux, 4Yx, 4Zx, 52x, 59x, 5Ax, 5Bx, 5Cx, 5Dx, 5Ex, 5Fx, 5Gx, 5Hx, 5Jx, 5Kx, 5Lx, 5Mx, 5Nx, 5Px, 5Qx, 5Vx, 5Zx, 93x, 94x, 95x, 96x, 9Bx, 9Hx, 9Jx, 9Yx, F2x, F3x, F4x, F5x, F6x, F9x, FAx, FBx, FCx, FDx, FEx, FFx, FGx, FHx, FVx, H5x, H6x, H7x, H8x, H9x, HAx, HBx • 7469-CTO, 52x, 53x, 54x, 55x, 56x, 57x, 58x, 59x, 5Ex, 5Fx, 5Gx, 5Kx, 5Rx, 62x, 63x, 64x, 65x, 66x, 67x, 68x, 69x, 6Ax, 6Cx, 6Dx, 7Cx, 7Dx, 7Ex, 7Fx, 7Gx, 7Hx, 7Jx, 7Kx, 7Lx, 7Px, 7Xx, 7Zx, 86x, 89x, 8Ex, 8Fx, 8Gx, 8Hx, 8Lx, 8Px, 8Sx, E2x, G2x, G4x • 7470-CTO, 5Gx, 5Hx, 62x, 63x, 64x, 69x, 6Ax, 6Dx, 6Jx, 6Kx, 6Mx, 6Px, 6Ux, 72x • 2046-CTO • 2047-CTO • 3249-CTO, 2Nx, 2Mx, NRx, NSx, NTx, Nux, MGx, MHx, MJx, MKx, MLx, MMx, MNx, MPx, 1Bx, 1Cx, 1Dx, 1Ex • 3323-CTO, 12x, 1Mx, 1Nx, 53x, 54x, 55x, 5Bx, 5Cx, 5Dx, 5Ex, 5Fx, 5Gx, 5Hx, 5Jx, 5Kx, 5Lx, 5Mx, 5Nx, 5Px, 5Rx, 5Sx, 5Tx, 5Ux, 5Vx, 5Wx, 5Yx, 5Zx, 62x, 63x, 64x, 65x, 66x, 67x, 68x, 69x, 6Ax, 6Bx, 6Cx, 6Dx, 6Ex, 6Fx, 6Gx, 6Hx, 6Jx, 6Kx, 6Lx, 6Mx, 6Nx, 6Px, 6Rx, 6Sx, 6Tx, 6Ux, 6Vx, 6Wx, 6Yx, 6Zx, 72x, 73x, 74x, 75x, 76x, 77x, 78x, 79x, 7Ax, 7Bx, 7Cx, 7Dx, 7Ex, 7Fx, 7Gx, 7Hx, 7Jx, 7Kx, 7Lx, 7Mx, 7Nx, 7Px, 7Rx, 7Sx, 7Tx, 7Ux, 7Vx, 7Wx, 7Xx, 8Gx, 8Jx, 8Kx, 8Lx, 8Nx, 8Px, 9Jx, 9Kx, 9Lx, 9Mx, AMx, ANx, APx, ARx, ASx, ATx, AUx, BWx, BYx, BZx, DKx, E2x, E3x, KAx, KCx, KDx, KEx, KFx, KGx, KHx, NBx, NCx, NDx, PNx, PPx, PRx, PSx, PTx, PUx, R2x • 3357-CTO, D7x • 3626-CTO, F8x, FCx, FDx, FEx, FFx, FGx, FHx, FJx, FKx, GXx, H9x, HDx • 3680-CTO, F8x, PDx • 3712-CTO • 4492-CTO • 5129-CTO, 72x, 73x, 74x, 75x, 76x, 77x, 78x • 5143-CTO, 29x, 2Ax, 2Bx, 2Cx, 2Dx, 2Ex, 2Fx, 2Gx, 2Hx, 2Jx, 2Kx, 2Lx, 2Mx, 2Nx, 2Px, 2Rx, 2Sx, 2Tx, 2Ux, 2Vx, 2Wx, 2Yx, 2Zx, 32x, 33x, 34x, 35x, 36x, 37x, 38x, 39x, 3Ax, 44x, 45x, 46x, 47x, 48x, 49x, 4Ax, 4Bx, 4Cx, 4Dx, 4Ex, 4Hx • 5385-CTO, D2x, D3x, D4x, D5x, D6x, D7x, D8x, D9x • 5397-CTO, F2x, F3x, FDx, FHx, FJx, FMx, FSx, FTx, FUx, FVx, FWx, FXx, FYx, FZx, GAx, GFx • 5413-CTO, FDx, LAx • 5442-CTO • 5446-CTO	42T4646	*

Downloaded from LpManual.com Manuals

Table 37. Parts list—Overall (continued)

No.	FRU	FRU no.	CRU ID
11	Battery pack, 6cell, 47+ • 7454-CTO, 22x, 23x, 24x, 25x, 27x, 28x, 2Gx, 2Hx, 2Jx, 2Kx, 2Mx, 2Nx, 2Px, 2Rx, 2Sx, 2Tx, 2Ux, 2Vx, 2Zx, 32x, 33x, 34x, 36x, 38x, 3Hx, 3Jx, 3Kx, 3Lx, 3Mx, 3Nx, 3Px, 3Qx, 3Sx, 3Tx, 3Vx, 3Wx, 3Xx, 3Yx, 3Zx, 92x, 93x, 96x, 98x, 9Gx, 9Hx, 9Jx, 9Lx, G2x, G3x, GBx, GCx, GDx, GEx, GFx, GGx, GHx, GJx, GKx, GNx, GPx • 7455-CTO, 32x, 33x, 34x, 35x, 38x, 39x, 3Ax, 3Bx, 3Cx, 3Dx, 3Fx, 3Gx, 3Hx, 3Jx, 3Lx, 3Mx, 3Nx, 3Px, 3Rx, 3Sx, 3Tx, 3Ux, 3Vx, 3Wx, 3Xx, 3Yx, 3Zx, 42x, 43x, 44x, 45x, 46x, 47x, 48x, 49x, 4Ax, 4Qx, 4Rx, 4Sx, 4Tx, 4Ux, 4Vx, 4Wx, 4Xx, 4Yx, 4Zx, 82x, 83x, 84x, 85x, 86x, 87x, 88x, 89x, 8Ax, 8Bx, 8Cx, 8Dx, 8Ex, 8Fx, 8Gx, 8Hx, 8Jx, 8Kx, 8Lx, 8Mx, 8Px, 8Qx, 8Rx, 8Sx, 8Tx, 8Ux, D2x, D3x, D7x, D8x, D9x, DAx, DBx, DCx, DDx, DEx, DFx, DGx, DHx, DJx, DKx, DLx, DMx, DNx, DPx, DQx, DRx, DUx, DVx, DWx, DXx, DYx, DZx, F2x, F3x, F4x, F5x, F6x, F7x, F9x, FBx, FCx, FDx, FEx, FFx, FGx, FHx, FJx, FLx, FMx, FNx, FPx, FQx, FRx, FSx, FTx, FUx, FVx, FWx, FXx, FYx, N2x, N3x, N4x, N5x, P6x, P7x, P9x, PAx, PBx, PCx, PDx, PEx, PFx, PGx, PHx, PJx • 7457-CTO, 42x, 43x, 44x, 46x, 47x, 49x, 4Cx, 4Dx, 4Ex, 4Fx, 4Kx, 4Lx, 4Mx, 52x, 53x, 54x, 55x, 56x, 57x, 58x • 7458-CTO, 22x, 26x, 27x, 28x, 29x, 2Ax, 2Bx, 2Cx, 2Dx, 2Qx, 2Rx, 2Sx, 2Tx, 2Vx, 4Xx, 4Yx, 52x, 53x, 55x, 56x, 57x, 5Dx, 5Ex, 5Lx, 5Mx, 5Nx, 5Qx, 5Rx, 5Sx, 5Tx, 62x, 63x, 64x, 65x, 66x, 67x, 68x, 6Ax, 6Bx, 6Cx, 6Dx, 6Ex, 6Jx, 6Kx, 6Mx, 6Nx, 6Qx, 6Rx, 6Sx, 6Tx, 6Ux, 6Vx, 6Wx, 6Xx, 6Zx, 72x, 73x, 74x, 76x, 77x, 78x, 79x, 7Bx, 7Ex, 7Nx, 7Px, 7Qx, 7Rx, 7Tx, 7Ux, 7Vx, 82x, 83x, 85x, 86x, 87x, 88x, 8Bx, 8Cx, 8Dx, 8Fx, 8Gx, 8Hx, 8Jx, 8Kx, 8Lx, 8Mx, 8Nx, 8Px, 8Qx, 8Rx, 8Sx, 8Tx, 8Wx, 8Xx, 8Yx, 8Zx, E2x, FAx, FCx, FDx, FEx, FFx, FGx, FJx, FKx, FQx, FSx, FTx, FUx, FVx, FWx, FXx, G4x, G6x, G7x, G8x, G9x, GBx, GCx, GDx, GEx, GFx, M2x, M3x, X4x, X5x • 7459-CTO, 5Fx, 63x, 68x, 6Bx, 6Cx, 6Dx, 6Ex, 6Fx, 6Jx, 6Kx, 6Lx, 6Mx, 6Nx, 6Px, 6Qx, 6Rx, 6Yx, 72x, 73x, 74x, 75x, H4x, H5x, H6x, H7x, M2x, M3x, M4x • 2023-CTO • 2024-CTO • 7462-CTO, 22x, 23x, 24x, 25x, 26x, 27x, 28x, 29x, 2Ax, 2Bx, 2Cx, 2Dx, 2Ex, 2Fx, 2Gx, 2Hx, 43x, 44x, 45x, 49x, 4Ax, 4Bx, 4Cx, 4Dx, 4Ex, 4Fx, 4Gx, 4Hx, 4Kx, 4Lx, 4Nx, 4Px, 4Zx, FKx, FMx, FQx, FTx, FUx, FVx • 7465-CTO, 25x, 26x, 27x, 28x, 29x, 2Dx, 2Fx, 2Jx, 2Kx, 2Lx, 2Wx, 2Xx, 2Yx, 3Jx, 3Kx, 3Lx, 3Sx, 3Tx, 3Ux, 3Xx, 3Yx, 3Zx, G2x, G3x, G4x, G8x, G9x, GAx, GBx, D2x, D3x, D6x, D7x, D8x, D9x, DAx, DBx, DCx, DDx, DEx, DFx, DGx, DHx, DJx, DKx • 7466-CTO, 32x, 33x, 38x, 39x, 3Bx, 3Cx, 3Ex, 3Fx, 3Gx, 3Kx, 3Lx, 3Mx, 3Vx, 3Wx, 3Xx, 3Yx, 43x, 46x, 4Vx, 4Wx, 4Xx, 53x, 54x, 55x, 56x, 57x, 58x, 5Rx, 5Sx, 5Tx, 5Ux, 5Wx, 5Xx, 5Yx, 99x, 9Ax, 9Dx, 9Fx, 9Gx, 9Kx, 9Lx, 9Mx, 9Nx, 9Px, 9Qx, 9Rx, 9Sx, 9Tx, 9Ux, 9Vx, 9Wx, 9Xx, 9Zx, DLx, DMx, F7x, F8x, FJx, FKx, FLx, FMx, FNx, FPx, FQx, FRx, FSx, FTx, FUx, FWx, FXx, FYx, FZx, N2x, H2x, H3x, H4x, HEx • 7469-CTO, 5Ax, 5Bx, 5Cx, 5Dx, 5Hx, 5Jx, 5Lx, 5Mx, 5Qx, 5Sx, 5Ux, 5Wx, 5Xx, 5Yx, 6Bx, 6Ex, 6Fx, 6Gx, 6Hx, 6Jx, 6Kx, 6Lx, 6Mx, 6Nx, 6Rx, 6Tx, 6Ux, 6Vx, 6Wx, 6Zx, 72x, 73x, 74x, 77x, 79x, 7Ax, 7Bx, 7Sx, 7Tx, 7Yx, 83x, 85x, 87x, 88x, 8Bx, 8Kx, 8Rx, 8Tx, 8Ux, 8Vx, 8Wx, 8Xx, 8Yx, 8Zx, 93x, 94x, 95x, 96x, 97x, 98x, 99x, 9Ax, 9Bx, 9Cx, 9Dx, 9Ex, 9Gx, G3x, G5x, G6x, G7x, G8x, G9x, GBx, GCx • 7470-CTO, 65x, 68x, 6Bx, 6Cx, 6Ex, 6Fx, 6Hx, 6Lx, 6Rx, 6Sx, 6Tx, 6Vx, 73x, 74x, 75x, 76x, 77x, 8Tx, 8Ux, 8Zx, E2x • 2046-CTO • 2047-CTO (continued)	42T4647	*

Downloaded from LpManual.com Manuals

Table 37. Parts list—Overall (continued)

No.	FRU	FRU no.	CRU ID
11	(continued) Battery pack, 6cell, 47+ • 3249-CTO, 22x, 23x, 24x, 25x, 26x, 27x, 28x, 29x, 2Ax, 2Bx, 2Cx, 2Dx, 2Ex, J2x, 2Fx, 2Gx, 2Hx, 2Jx, 2Kx, 2Lx, J3x, J4x, J5x, J6x, J7x, J8x, J9x, JAx, 2Rx, 2Px, 2Sx, 2Tx, 2Ux, 2Vx, JFx, JGx, JHx, JJx, JKx, JLx, JMx, JNx, JPx, JQx, JRx, JSx, JTx, JUx, 32x, 3Rx, 33x, 3Sx, 34x, 3Tx, 35x, 3Ux, 36x, 3Vx, 37x, NVx, 3Wx, 38x, C2x, MCx, C3x, MDx, MRx, MSx, MTx, MUx, MVx, MWx, MXx, MYx, MZx, 2Wx, 2Xx, 2Yx, 2Zx, 39x, 3Ax, 3Bx, 3Cx, 3Dx, 3Ex, 3Fx, 3Gx, 3Hx, 3Jx, 3Kx, 3Lx, 3Mx, 3Nx, CBx, CCx, CDx, CEx, CFx, CGx, 3Xx, C8x, CKx, CHx, CMx, CNx, CPx, CRx, CSx, CTx, CUx, CJx, CLx, DFx, 3Yx, EPx, ERx, ESx, DCx, DDx, DEx, DGx, DHx, DJx, ENx, QBx, QLx, QMx, QNx, QPx, QRx, QCx, QDx, QAx, Q9x, 19x, 1Ax, 1Fx, 1Gx, 1Hx, 1Jx • 3323-CTO, 1Px, 1Rx, 1Sx, 1Tx, 1Ux, 1Vx, 1Wx, 1Xx, 1Yx, 1Zx, 3Qx, 3Zx, 42x, 43x, 44x, 45x, 46x, 48x, 49x, 4Ax, 4Cx, 4Dx, 4Ex, 4Fx, 4Gx, 4Hx, 4Jx, 4Kx, 4Lx, 4Mx, 4Nx, 4Px, 4Rx, 4Sx, 4Tx, 4Ux, 4Vx, 4Wx, 4Yx, 4Zx, 52x, 56x, 57x, 58x, 59x, 5Ax, 7Yx, 7Zx, 82x, 83x, 84x, 85x, 86x, 87x, 88x, 89x, 8Ax, 8Bx, 8Cx, 8Dx, 8Ex, 8Fx, 8Rx, 8Sx, 8Tx, 8Ux, 8Vx, 8Wx, 8Xx, 8Yx, 8Zx, 92x, 93x, 94x, 95x, 96x, 97x, 98x, 99x, 9Ax, 9Bx, 9Cx, 9Dx, 9Ex, 9Fx, 9Gx, 9Hx, 9Nx, 9Px, 9Rx, 9Sx, 9Tx, 9Ux, 9Vx, 9Wx, 9Yx, 9Zx, A2x, A3x, A4x, A5x, A6x, A7x, A8x, A9x, AAx, ABx, ACx, ADx, AEx, AFx, AGx, AHx, AJx, AKx, ALx, AVx, AWx, AXx, AYx, AZx, B2x, B3x, B4x, B5x, B6x, B7x, B8x, B9x, BAx, BBx, BCx, BDx, BEx, BFx, BGx, BHx, BJx, BKx, BLx, BMx, BNx, BPx, BRx, BSx, BTx, BUx, BVx, BXx, C4x, C5x, C6x, C7x, C9x, CAx, CVx, CWx, CXx, CYx, CZx, D8x, D9x, DAx, DLx, DMx, DNx, DPx, DRx, DSx, DTx, DUx, DVx, DWx, DXx, DYx, DZx, E4x, E5x, E6x, E7x, E8x, E9x, EAx, EBx, EEx, EFx, EGx, EHx, EJx, EKx, ELx, EMx, ETx, EUx, EVx, EWx, EXx, EYx, EZx, JBx, JCx, JDx, JEx, JVx, JWx, JXx, JYx, JZx, K2x, K3x, K4x, K5x, K6x, K7x, K8x, K9x, KJx, KLx, KMx, KNx, KPx, KRx, KSx, KTx, KUx, KVx, KWx, KYx, KZx, L2x, L3x, L4x, L5x, L6x, L7x, L8x, LAx, LBx, LCx, LDx, LEx, LFx, LGx, LHx, LJx, LKx, LLx, LPx, LRx, LSx, LTx, LUx, LVx, LWx, LXx, LYx, LZx, M2x, M3x, M4x, M5x, M6x, M7x, M8x, M9x, MAx, MBx, MEx, MFx, N2x, N3x, N4x, N5x, N6x, N7x, N8x, N9x, NAx, NEx, NFx, NGx, NHx, NJx, NKx, NLx, NNx, NPx, NWx, NXx, NYx, NZx, PMx, Qex, QUx, QVx, QWx, QXx, QYx, QZx, RAx, RBx, RCx, RHx, RJx, RKx, RLx, RNx, RPx, RRx, RSx • 3357-CTO, 3Px, D2x, D3x, D4x, D5x, D6x, LMx, LNx • 3626-CTO, 11x, 12x, 13x, 15x, 16x, 17x, 18x, 19x, 1Kx, F2x, F3x, F5x, F6x, F9x, FBx, FLx, FMx, FNx, FPx, FRx, FSx, FUx, FVx, FWx, FXx, FYx, FZx, G2x, G3x, G4x, G5x, G6x, G7x, G8x, G9x, GAx, GBx, GCx, GDx, GEx, GFx, GHx, GJx, GKx, GLx, GMx, GNx, GSx, GTx, GUx, GYx, GZx, H2x, H5x, H7x, H8x, H8x, H9x, HAx, HBx, HCx, HEx, HFx, HGx, HHx, HJx, HKx, HLx, HMx, HUx, HVx, HWx, HXx, Hyx, HZx, PVx, PXx, PYx, PZx, Q2x, Q3x, Q4x, Q5x, QFx, QGx, QJx, QKx, QSx, QTx, R3x, R4x, R4x, R5x, R5x, R6x, R6x, R7x, R8x, R9x, RMx, RTx, RUx, RVx, RWx, RXx, N2x, RYx, RZx, Q8x • 3680-CTO, 11x, 4Qx, F9x, FBx, H8x, H9x, HAx, HBx, HCx, HNx, HPx, HQx, HRx, HSx, HTx, P2x, P3x, P4x, P5x, P6x, P7x, P8x, P9x, PAx, PBx, PCx, PEx, PGx, PHx, PKx, PLx, Q6x, Q7x, N2x • 3712-CTO • 4492-CTO • 5129-CTO • 5143-CTO, 22x, 23x, 24x, 25x, 26x, 27x, 28x, 3Ux, 3Vx, 3Wx, 3Yx, 3Zx, 42x, 43x, 4Gx, 4Jx, 4Kx, 4Lx, 4Mx, 4Nx, 4Px • 5385-CTO • 5397-CTO, F4x, F5x, F6x, F7x, F9x, FAx, FBx, FFx, FGx, FKx, FNx, FPx, FRx, G2x, G3x, G4x, G5x, G6x, G7x, G8x, G9x, GBx, GDx, GEx • 5413-CTO, FFx, FGx, L2x, L3x, L4x, L6x, L8x, L9x • 5442-CTO • 5446-CTO	42T4647	*

Downloaded from LpManual.com Manuals

Table 37. Parts list—Overall (continued)

No.	FRU	FRU no.	CRU ID
11	Battery pack, 6cell, 47+ • 7454-CTO, 22x, 23x, 24x, 25x, 27x, 28x, 2Gx, 2Hx, 2Jx, 2Kx, 2Mx, 2Nx, 2Px, 2Rx, 2Sx, 2Tx, 2Ux, 2Vx, 2Zx, 32x, 33x, 34x, 36x, 38x, 3Hx, 3Jx, 3Kx, 3Lx, 3Mx, 3Nx, 3Px, 3Qx, 3Sx, 3Tx, 3Vx, 3Wx, 3Xx, 3Yx, 3Zx, 92x, 93x, 96x, 98x, 9Gx, 9Hx, 9Jx, 9Lx, G2x, G3x, GBx, GCx, GDx, GEx, GFx, GGx, GHx, GJx, GKx, GNx, GPx • 7455-CTO, 32x, 33x, 34x, 35x, 38x, 39x, 3Ax, 3Bx, 3Cx, 3Dx, 3Fx, 3Gx, 3Hx, 3Jx, 3Lx, 3Mx, 3Nx, 3Px, 3Rx, 3Sx, 3Tx, 3Ux, 3Vx, 3Wx, 3Xx, 3Yx, 3Zx, 42x, 43x, 44x, 45x, 46x, 47x, 48x, 49x, 4Ax, 4Qx, 4Rx, 4Sx, 4Tx, 4Ux, 4Vx, 4Wx, 4Xx, 4Yx, 4Zx, 82x, 83x, 84x, 85x, 86x, 87x, 88x, 89x, 8Ax, 8Bx, 8Cx, 8Dx, 8Ex, 8Fx, 8Gx, 8Hx, 8Jx, 8Kx, 8Lx, 8Mx, 8Px, 8Qx, 8Rx, 8Sx, 8Tx, 8Ux, D2x, D3x, D7x, D8x, D9x, DAx, DBx, DCx, DDx, DEx, DFx, DGx, DHx, DJx, DKx, DLx, DMx, DNx, DPx, DQx, DRx, DUx, DVx, DWx, DXx, DYx, DZx, F2x, F3x, F4x, F5x, F6x, F7x, F9x, FBx, FCx, FDx, FEx, FFx, FGx, FHx, FJx, FLx, FMx, FNx, FPx, FQx, FRx, FSx, FTx, FUx, FVx, FWx, FXx, FYx, N2x, N3x, N4x, N5x, P6x, P7x, P9x, PAx, PBx, PCx, PDx, PEx, PFx, PGx, PHx, PJx • 7457-CTO, 42x, 43x, 44x, 46x, 47x, 49x, 4Cx, 4Dx, 4Ex, 4Fx, 4Kx, 4Lx, 4Mx, 52x, 53x, 54x, 55x, 56x, 57x, 58x • 7458-CTO, 22x, 26x, 27x, 28x, 29x, 2Ax, 2Bx, 2Cx, 2Dx, 2Qx, 2Rx, 2Sx, 2Tx, 2Vx, 4Xx, 4Yx, 52x, 53x, 55x, 56x, 57x, 5Dx, 5Ex, 5Lx, 5Mx, 5Nx, 5Qx, 5Rx, 5Sx, 5Tx, 62x, 63x, 64x, 65x, 66x, 67x, 68x, 6Ax, 6Bx, 6Cx, 6Dx, 6Ex, 6Jx, 6Kx, 6Mx, 6Nx, 6Qx, 6Rx, 6Sx, 6Tx, 6Ux, 6Vx, 6Wx, 6Xx, 6Zx, 72x, 73x, 74x, 76x, 77x, 78x, 79x, 7Bx, 7Ex, 7Nx, 7Px, 7Qx, 7Rx, 7Tx, 7Ux, 7Vx, 82x, 83x, 85x, 86x, 87x, 88x, 8Bx, 8Cx, 8Dx, 8Fx, 8Gx, 8Hx, 8Jx, 8Kx, 8Lx, 8Mx, 8Nx, 8Px, 8Qx, 8Rx, 8Sx, 8Tx, 8Wx, 8Xx, 8Yx, 8Zx, E2x, FAx, FCx, FDx, FEx, FFx, FGx, FJx, FKx, FQx, FSx, FTx, FUx, FVx, FWx, FXx, G4x, G6x, G7x, G8x, G9x, GBx, GCx, GDx, GEx, GFx, M2x, M3x, X4x, X5x • 7459-CTO, 5Fx, 63x, 68x, 6Bx, 6Cx, 6Dx, 6Ex, 6Fx, 6Jx, 6Kx, 6Lx, 6Mx, 6Nx, 6Px, 6Qx, 6Rx, 6Yx, 72x, 73x, 74x, 75x, H4x, H5x, H6x, H7x, M2x, M3x, M4x • 2023-CTO • 2024-CTO • 7462-CTO, 22x, 23x, 24x, 25x, 26x, 27x, 28x, 29x, 2Ax, 2Bx, 2Cx, 2Dx, 2Ex, 2Fx, 2Gx, 2Hx, 43x, 44x, 45x, 49x, 4Ax, 4Bx, 4Cx, 4Dx, 4Ex, 4Fx, 4Gx, 4Hx, 4Kx, 4Lx, 4Nx, 4Px, 4Zx, FKx, FMx, FQx, FTx, FUx, FVx • 7465-CTO, 25x, 26x, 27x, 28x, 29x, 2Dx, 2Fx, 2Jx, 2Kx, 2Lx, 2Wx, 2Xx, 2Yx, 3Jx, 3Kx, 3Lx, 3Sx, 3Tx, 3Ux, 3Xx, 3Yx, 3Zx, G2x, G3x, G4x, G8x, G9x, GAx, GBx, D2x, D3x, D6x, D7x, D8x, D9x, DAx, DBx, DCx, DDx, DEx, DFx, DGx, DHx, DJx, DKx • 7466-CTO, 32x, 33x, 38x, 39x, 3Bx, 3Cx, 3Ex, 3Fx, 3Gx, 3Kx, 3Lx, 3Mx, 3Vx, 3Wx, 3Xx, 3Yx, 43x, 46x, 4Vx, 4Wx, 4Xx, 53x, 54x, 55x, 56x, 57x, 58x, 5Rx, 5Sx, 5Tx, 5Ux, 5Wx, 5Xx, 5Yx, 99x, 9Ax, 9Dx, 9Fx, 9Gx, 9Kx, 9Lx, 9Mx, 9Nx, 9Px, 9Qx, 9Rx, 9Sx, 9Tx, 9Ux, 9Vx, 9Wx, 9Xx, 9Zx, DLx, DMx, F7x, F8x, FJx, FKx, FLx, FMx, FNx, FPx, FQx, FRx, FSx, FTx, FUx, FWx, FXx, FYx, FZx, N2x, H2x, H3x, H4x, HEx • 7469-CTO, 5Ax, 5Bx, 5Cx, 5Dx, 5Hx, 5Jx, 5Lx, 5Mx, 5Qx, 5Sx, 5Ux, 5Wx, 5Xx, 5Yx, 6Bx, 6Ex, 6Fx, 6Gx, 6Hx, 6Jx, 6Kx, 6Lx, 6Mx, 6Nx, 6Rx, 6Tx, 6Ux, 6Vx, 6Wx, 6Zx, 72x, 73x, 74x, 77x, 79x, 7Ax, 7Bx, 7Sx, 7Tx, 7Yx, 83x, 85x, 87x, 88x, 8Bx, 8Kx, 8Rx, 8Tx, 8Ux, 8Vx, 8Wx, 8Xx, 8Yx, 8Zx, 93x, 94x, 95x, 96x, 97x, 98x, 99x, 9Ax, 9Bx, 9Cx, 9Dx, 9Ex, 9Gx, G3x, G5x, G6x, G7x, G8x, G9x, GBx, GCx • 7470-CTO, 65x, 68x, 6Bx, 6Cx, 6Ex, 6Fx, 6Hx, 6Lx, 6Rx, 6Sx, 6Tx, 6Vx, 73x, 74x, 75x, 76x, 77x, 8Tx, 8Ux, 8Zx, E2x • 2046-CTO • 2047-CTO (continued)	42T4648	*

Downloaded from LpManual.com Manuals

Table 37. Parts list—Overall (continued)

No.	FRU	FRU no.	CRU ID
11	(continued) Battery pack, 6cell, 47+ • 3249-CTO, 22x, 23x, 24x, 25x, 26x, 27x, 28x, 29x, 2Ax, 2Bx, 2Cx, 2Dx, 2Ex, J2x, 2Fx, 2Gx, 2Hx, 2Jx, 2Kx, 2Lx, J3x, J4x, J5x, J6x, J7x, J8x, J9x, JAx, 2Rx, 2Px, 2Sx, 2Tx, 2Ux, 2Vx, JFx, JGx, JHx, JJx, JKx, JLx, JMx, JNx, JPx, JQx, JRx, JSx, JTx, JUx, 32x, 3Rx, 33x, 3Sx, 34x, 3Tx, 35x, 3Ux, 36x, 3Vx, 37x, NVx, 3Wx, 38x, C2x, MCx, C3x, MDx, MRx, MSx, MTx, MUx, MVx, MWx, MXx, MYx, MZx, 2Wx, 2Xx, 2Yx, 2Zx, 39x, 3Ax, 3Bx, 3Cx, 3Dx, 3Ex, 3Fx, 3Gx, 3Hx, 3Jx, 3Kx, 3Lx, 3Mx, 3Nx, CBx, CCx, CDx, CEx, CFx, CGx, 3Xx, C8x, CKx, CHx, CMx, CNx, CPx, CRx, CSx, CTx, CUx, CJx, CLx, DFx, 3Yx, EPx, ERx, ESx, DCx, DDx, DEx, DGx, DHx, DJx, ENx, QBx, QLx, QMx, QNx, QPx, QRx, QCx, QDx, QAx, Q9x, 19x, 1Ax, 1Fx, 1Gx, 1Hx, 1Jx • 3323-CTO, 1Px, 1Rx, 1Sx, 1Tx, 1Ux, 1Vx, 1Wx, 1Xx, 1Yx, 1Zx, 3Qx, 3Zx, 42x, 43x, 44x, 45x, 46x, 48x, 49x, 4Ax, 4Cx, 4Dx, 4Ex, 4Fx, 4Gx, 4Hx, 4Jx, 4Kx, 4Lx, 4Mx, 4Nx, 4Px, 4Rx, 4Sx, 4Tx, 4Ux, 4Vx, 4Wx, 4Yx, 4Zx, 52x, 56x, 57x, 58x, 59x, 5Ax, 7Yx, 7Zx, 82x, 83x, 84x, 85x, 86x, 87x, 88x, 89x, 8Ax, 8Bx, 8Cx, 8Dx, 8Ex, 8Fx, 8Rx, 8Sx, 8Tx, 8Ux, 8Vx, 8Wx, 8Xx, 8Yx, 8Zx, 92x, 93x, 94x, 95x, 96x, 97x, 98x, 99x, 9Ax, 9Bx, 9Cx, 9Dx, 9Ex, 9Fx, 9Gx, 9Hx, 9Nx, 9Px, 9Rx, 9Sx, 9Tx, 9Ux, 9Vx, 9Wx, 9Yx, 9Zx, A2x, A3x, A4x, A5x, A6x, A7x, A8x, A9x, AAx, ABx, ACx, ADx, AEx, AFx, AGx, AHx, AJx, AKx, ALx, AVx, AWx, AXx, AYx, AZx, B2x, B3x, B4x, B5x, B6x, B7x, B8x, B9x, BAx, BBx, BCx, BDx, BEx, BFx, BGx, BHx, BJx, BKx, BLx, BMx, BNx, BPx, BRx, BSx, BTx, BUx, BVx, BXx, C4x, C5x, C6x, C7x, C9x, CAx, CVx, CWx, CXx, CYx, CZx, D8x, D9x, DAx, DLx, DMx, DNx, DPx, DRx, DSx, DTx, DUx, DVx, DWx, DXx, DYx, DZx, E4x, E5x, E6x, E7x, E8x, E9x, EAx, EBx, EEx, EFx, EGx, EHx, EJx, EKx, ELx, EMx, ETx, EUx, EVx, EWx, EXx, EYx, EZx, JBx, JCx, JDx, JEx, JVx, JWx, JXx, JYx, JZx, K2x, K3x, K4x, K5x, K6x, K7x, K8x, K9x, KJx, KLx, KMx, KNx, KPx, KRx, KSx, KTx, KUx, KVx, KWx, KYx, KZx, L2x, L3x, L4x, L5x, L6x, L7x, L8x, LAx, LBx, LCx, LDx, LEx, LFx, LGx, LHx, LJx, LKx, LLx, LPx, LRx, LSx, LTx, LUx, LVx, LWx, LXx, LYx, LZx, M2x, M3x, M4x, M5x, M6x, M7x, M8x, M9x, MAx, MBx, MEx, MFx, N2x, N3x, N4x, N5x, N6x, N7x, N8x, N9x, NAx, NEx, NFx, NGx, NHx, NJx, NKx, NLx, NNx, NPx, NWx, NXx, NYx, NZx, PMx, Qex, QUx, QVx, QWx, QXx, QYx, QZx, RAx, RBx, RCx, RHx, RJx, RKx, RLx, RNx, RPx, RRx, RSx • 3357-CTO, 3Px, D2x, D3x, D4x, D5x, D6x, LMx, LNx • 3626-CTO, 11x, 12x, 13x, 15x, 16x, 17x, 18x, 19x, 1Kx, F2x, F3x, F5x, F6x, F9x, FBx, FLx, FMx, FNx, FPx, FRx, FSx, FUx, FVx, FWx, FXx, FYx, FZx, G2x, G3x, G4x, G5x, G6x, G7x, G8x, G9x, GAx, GBx, GCx, GDx, GEx, GFx, GHx, GJx, GKx, GLx, GMx, GNx, GSx, GTx, GUx, GYx, GZx, H2x, H5x, H7x, H8x, H8x, H9x, HAx, HBx, HCx, HEx, HFx, HGx, HHx, HJx, HKx, HLx, HMx, HUx, HVx, HWx, HXx, Hyx, HZx, PVx, PXx, PYx, PZx, Q2x, Q3x, Q4x, Q5x, QFx, QGx, QJx, QKx, QSx, QTx, R3x, R4x, R4x, R5x, R5x, R6x, R6x, R7x, R8x, R9x, RMx, RTx, RUx, RVx, RWx, RXx, N2x, RYx, RZx, Q8x • 3680-CTO, 11x, 4Qx, F9x, FBx, H8x, H9x, HAx, HBx, HCx, HNx, HPx, HQx, HRx, HSx, HTx, P2x, P3x, P4x, P5x, P6x, P7x, P8x, P9x, PAx, PBx, PCx, PEx, PGx, PHx, PKx, PLx, Q6x, Q7x, N2x • 3712-CTO • 4492-CTO • 5129-CTO • 5143-CTO, 22x, 23x, 24x, 25x, 26x, 27x, 28x, 3Ux, 3Vx, 3Wx, 3Yx, 3Zx, 42x, 43x, 4Gx, 4Jx, 4Kx, 4Lx, 4Mx, 4Nx, 4Px • 5385-CTO • 5397-CTO, F4x, F5x, F6x, F7x, F9x, FAx, FBx, FFx, FGx, FKx, FNx, FPx, FRx, G2x, G3x, G4x, G5x, G6x, G7x, G8x, G9x, GBx, GDx, GEx • 5413-CTO, FFx, FGx, L2x, L3x, L4x, L6x, L8x, L9x • 5442-CTO • 5446-CTO	42T4648 42T4835 42T4837	*

Downloaded from LpManual.com Manuals

Table 37. Parts list—Overall (continued)

No.	FRU	FRU no.	CRU ID
11	Battery pack, 9 cell, 47++ • 7454-CTO • 7455-CTO, 3Ex, 3Qx, D5x, FKx • 7457-CTO • 7458-CTO, 2Ex, 58x, 5Fx, 5Hx, 5Px, 6Lx, 6Px, 6Yx, 7Cx, 7Dx, 84x, 89x, 8Ax, G5x • 7459-CTO, 64x, 65x, 66x, 6Ax, 6Sx, 6Tx, 6Ux, 6Wx, 6Zx, E3x, H2x • 2023-CTO • 2024-CTO • 7462-CTO • 7465-CTO • 7466-CTO, 3Hx, 3Jx, 3Nx, 3Px, 3Qx, 3Rx, 3Sx, 3Zx, 44x, 92x, 97x, 98x, 9Cx, 9Ex, HCx, HDx • 7469-CTO, 5Nx, 5Px, 5Tx, 5Vx, 5Zx, 6Px, 6Qx, 6Xx, 6Yx, 75x, 76x, 78x, 7Mx, 7Nx, 7Qx, 7Rx, 7Ux, 7Vx, 82x, 84x, 8Ax, 8Cx, 8Dx, 8Jx, 8Mx, 8Nx, 8Qx, GAx • 7470-CTO, 6Gx, 6Nx, 6Qx • • 2046-CTO • 2047-CTO	42T4649	*
11	Battery pack, 9 cell, 47++ • 7454-CTO • 7455-CTO, 3Ex, 3Qx, D5x, FKx • 7457-CTO • 7458-CTO, 2Ex, 58x, 5Fx, 5Hx, 5Px, 6Lx, 6Px, 6Yx, 7Cx, 7Dx, 84x, 89x, 8Ax, G5x • 7459-CTO, 64x, 65x, 66x, 6Ax, 6Sx, 6Tx, 6Ux, 6Wx, 6Zx, E3x, H2x • 2023-CTO • 2024-CTO • 7462-CTO • 7465-CTO • 7466-CTO, 3Hx, 3Jx, 3Nx, 3Px, 3Qx, 3Rx, 3Sx, 3Zx, 44x, 92x, 97x, 98x, 9Cx, 9Ex, HCx, HDx • 7469-CTO, 5Nx, 5Px, 5Tx, 5Vx, 5Zx, 6Px, 6Qx, 6Xx, 6Yx, 75x, 76x, 78x, 7Mx, 7Nx, 7Qx, 7Rx, 7Ux, 7Vx, 82x, 84x, 8Ax, 8Cx, 8Dx, 8Jx, 8Mx, 8Nx, 8Qx, GAx • 7470-CTO, 6Gx, 6Nx, 6Qx • • 2046-CTO • 2047-CTO	42T4650	*
11	Battery pack, 9 cell, 47++ • 3249-CTO • 3323-CTO, 1Lx, DBx, RDx, REx, RFx, RGx • 3357-CTO • 3626-CTO, 14x, F4x, F7x, FAx, FTx, GPx, GWx, H3x, H6x, PWx, QHx • 3680-CTO, 14x, F7x, FAx, PFx • 3712-CTO • 4492-CTO • 5129-CTO, R1x • 5143-CTO • 5385-CTO • 5397-CTO, F8x, FEx, GCx, GGx • 5413-CTO, FEx, L7x, LBx • 5442-CTO • 5446-CTO	42T4694	*

Downloaded from LpManual.com Manuals

Table 37. Parts list—Overall (continued)

No.	FRU	FRU no.	CRU ID
11	Battery pack, 9 cell, 47++ • 3249-CTO • 3323-CTO, 1Lx, DBx, RDx, REx, RFx, RGx • 3357-CTO • 3626-CTO, 14x, F4x, F7x, FAx, FTx, GPx, GWx, H3x, H6x, PWx, QHx • 3680-CTO, 14x, F7x, FAx, PFx • 3712-CTO • 4492-CTO • 5129-CTO, R1x • 5143-CTO • 5385-CTO • 5397-CTO, F8x, FEx, GCx, GGx • 5413-CTO, FEx, L7x, LBx • 5442-CTO • 5446-CTO	42T4696	*
11	Battery pack, 9 cell, • 3249-CTO • 3323-CTO • 3357-CTO • 3626-CTO, GRx, GVx, H4x • 3680-CTO, PJx • 3712-CTO • 4492-CTO • 5129-CTO • 5143-CTO, L5x • 5385-CTO • 5397-CTO, FCx • 5413-CTO • 5442-CTO • 5446-CTO	42T4823	*
11	Battery pack, 9 cell, • 3249-CTO • 3323-CTO • 3357-CTO • 3626-CTO, GRx, GVx, H4x • 3680-CTO, PJx • 3712-CTO • 4492-CTO • 5129-CTO • 5143-CTO, L5x • 5385-CTO • 5397-CTO, FCx • 5413-CTO • 5442-CTO • 5446-CTO	42T4825	*
12	Hard disk drive rubber rails	41V9756	*

Downloaded from LpManual.com Manuals

Table 37. Parts list—Overall (continued)

No.	FRU	FRU no.	CRU ID
13	SATA hard disk drive, 80 GB, 5,400 rpm **OP** • 7454-CTO • 7455-CTO • 7457-CTO, 4Gx • 7458-CTO • 7459-CTO • 2023-CTO • 2024-CTO • 7462-CTO • 7465-CTO • 7466-CTO • 7469-CTO • 7470-CTO, 6Kx • 2046-CTO • 2047-CTO	39T2885	*
13	SATA hard disk drive, 80 GB, 5,400 rpm **OP** • 7454-CTO • 7455-CTO • 7457-CTO, 4Gx • 7458-CTO • 7459-CTO • 2023-CTO • 2024-CTO • 7462-CTO • 7465-CTO • 7466-CTO • 7469-CTO • 7470-CTO, 6Kx • 2046-CTO • 2047-CTO	42T1491	*
13	SATA hard disk drive, 80 GB, 5,400 rpm • 7454-CTO • 7455-CTO • 7457-CTO, 4Gx • 7458-CTO • 7459-CTO • 2023-CTO • 2024-CTO • 7462-CTO • 7465-CTO • 7466-CTO • 7469-CTO • 7470-CTO, 6Kx • 2046-CTO • 2047-CTO	42T1305	*

Downloaded from LpManual.com Manuals

Table 37. Parts list—Overall (continued)

No.	FRU	FRU no.	CRU ID
13	SATA hard disk drive, 80 GB, 5,400 rpm • 7454-CTO • 7455-CTO • 7457-CTO, 4Gx • 7458-CTO • 7459-CTO • 2023-CTO • 2024-CTO • 7462-CTO • 7465-CTO • 7466-CTO • 7469-CTO • 7470-CTO, 6Kx • 2046-CTO • 2047-CTO	42T1575	*
13	SATA hard disk drive, 160 GB, 5,400 rpm OP • 7454-CTO, 25x, 26x, 29x, 2Lx, 2Nx, 2Qx, 2Rx, 2Ux, 2Vx, 2Xx, 2Yx, 32x, 33x, 92x, 95x, 97x, 98x, 9Fx, 9Hx, 9Lx, G6x, G7x, GDx • 7455-CTO, 35x, 36x, 39x, 3Ax, 3Dx, 3Jx, 3Kx, 3Px, 3Wx, D9x, DHx, F7x, F9x • 7457-CTO, 45x, 48x, 49x, 4Ax, 4Bx, 4Hx, 4Lx, 4Mx, 4Px, 4Qx, 4Vx • 7458-CTO, 2Rx, 52x, 54x, 55x, 56x, 59x, 5Dx, 5Jx, 5Px, 5Tx, 69x, 72x, 74x, 79x, 7Fx, 7Mx, 7Nx, 7Qx, 7Sx, 7Wx, 7Xx, 84x, 87x, 8Ax, 8Bx, 8Cx, 8Dx, 8Ex, 8Hx, 8Jx, 8Kx, 8Nx, 8Qx, FGx, FNx, FSx, X4x, X5x • 7459-CTO, 5Ex, 67x, 68x, 69x, 6Bx, 6Dx, 6Fx, 6Gx, 6Jx, 6Lx, 6Qx, 6Wx, H3x, H4x, H5x, M4x • 2023-CTO • 2024-CTO • 7462-CTO, 42x, 46x, 47x, 48x, 49x, 4Ax, 4Bx, 4Jx, 4Kx, 4Qx, 4Tx, 4Ux, 4Xx, 4Yx, F6x, FBx, FJx, FLx, FNx, FQx, FSx, FTx, FUx, FVx • 7465-CTO, 23x, 24x, 25x, 26x, 27x, 2Ex, 2Fx, 2Lx, 2Mx, 2Qx, 2Rx, 2Ux, 2Vx, 2Wx, 2Xx, 3Nx, 3Px, 3Rx, 3Wx, D8x, D9x, DCx, DDx, DFx, DGx, DKx, G5x, G6x • 7466-CTO, 34x, 35x, 38x, 3Ax, 3Bx, 3Hx, 3Px, 3Qx, 3Rx, 3Sx, 99x, 9Kx, 9Rx, 9Xx, HCx, HDx, HEx • 7469-CTO, 55x, 56x, 57x, 58x, 5Ax, 5Cx, 5Ex, 5Gx, 5Hx, 5Qx, 5Rx, 5Ux, 5Vx, 77x, 78x, 7Cx, 7Dx, 7Nx, 7Qx, 7Yx, 8Ux, 8Zx, GBx, GCx • 7470-CTO, 5Gx, 5Hx, 62x, 65x, 69x, 6Ax, 6Bx, 6Dx, 6Hx, 6Lx, 6Rx, 6Sx, E2x • 2046-CTO • 2047-CTO	39T2899	*
13	SATA hard disk drive, 160 GB, 5,400 rpm OP • 7454-CTO, 25x, 26x, 29x, 2Lx, 2Nx, 2Qx, 2Rx, 2Ux, 2Vx, 2Xx, 2Yx, 32x, 33x, 92x, 95x, 97x, 98x, 9Fx, 9Hx, 9Lx, G6x, G7x, GDx • 7455-CTO, 35x, 36x, 39x, 3Ax, 3Dx, 3Jx, 3Kx, 3Px, 3Wx, D9x, DHx, F7x, F9x • 7457-CTO, 45x, 48x, 49x, 4Ax, 4Bx, 4Hx, 4Lx, 4Mx, 4Px, 4Qx, 4Vx • 7458-CTO, 2Rx, 52x, 54x, 55x, 56x, 59x, 5Dx, 5Jx, 5Px, 5Tx, 69x, 72x, 74x, 79x, 7Fx, 7Mx, 7Nx, 7Qx, 7Sx, 7Wx, 7Xx, 84x, 87x, 8Ax, 8Bx, 8Cx, 8Dx, 8Ex, 8Hx, 8Jx, 8Kx, 8Nx, 8Qx, FGx, FNx, FSx, X4x, X5x • 7459-CTO, 5Ex, 67x, 68x, 69x, 6Bx, 6Dx, 6Fx, 6Gx, 6Jx, 6Lx, 6Qx, 6Wx, H3x, H4x, H5x, M4x • 2023-CTO • 2024-CTO • 7462-CTO, 42x, 46x, 47x, 48x, 49x, 4Ax, 4Bx, 4Jx, 4Kx, 4Qx, 4Tx, 4Ux, 4Xx, 4Yx, F6x, FBx, FJx, FLx, FNx, FQx, FSx, FTx, FUx, FVx • 7465-CTO, 23x, 24x, 25x, 26x, 27x, 2Ex, 2Fx, 2Lx, 2Mx, 2Qx, 2Rx, 2Ux, 2Vx, 2Wx, 2Xx, 3Nx, 3Px, 3Rx, 3Wx, D8x, D9x, DCx, DDx, DFx, DGx, DKx, G5x, G6x • 7466-CTO, 34x, 35x, 38x, 3Ax, 3Bx, 3Hx, 3Px, 3Qx, 3Rx, 3Sx, 99x, 9Kx, 9Rx, 9Xx, HCx, HDx, HEx	42T1501	*

Downloaded from LpManual.com Manuals

Table 37. Parts list—Overall (continued)

No.	FRU	FRU no.	CRU ID
	• 7469-CTO, 55x, 56x, 57x, 58x, 5Ax, 5Cx, 5Ex, 5Gx, 5Hx, 5Qx, 5Rx, 5Ux, 5Vx, 77x, 78x, 7Cx, 7Dx, 7Nx, 7Qx, 7Yx, 8Ux, 8Zx, GBx, GCx • 7470-CTO, 5Gx, 5Hx, 62x, 65x, 69x, 6Ax, 6Bx, 6Dx, 6Hx, 6Lx, 6Rx, 6Sx, E2x • 2046-CTO • 2047-CTO		
13	SATA hard disk drive, 160 GB, 5,400 rpm • 7454-CTO, 25x, 26x, 29x, 2Lx, 2Nx, 2Qx, 2Rx, 2Ux, 2Vx, 2Xx, 2Yx, 32x, 33x, 92x, 95x, 97x, 98x, 9Fx, 9Hx, 9Lx, G6x, G7x, GDx • 7455-CTO, 35x, 36x, 39x, 3Ax, 3Dx, 3Jx, 3Kx, 3Px, 3Wx, D9x, DHx, F7x, F9x • 7457-CTO, 45x, 48x, 49x, 4Ax, 4Bx, 4Hx, 4Lx, 4Mx, 4Px, 4Qx, 4Vx • 7458-CTO, 2Rx, 52x, 54x, 55x, 56x, 59x, 5Dx, 5Jx, 5Px, 5Tx, 69x, 72x, 74x, 79x, 7Fx, 7Mx, 7Nx, 7Qx, 7Sx, 7Wx, 7Xx, 84x, 87x, 8Ax, 8Bx, 8Cx, 8Dx, 8Ex, 8Hx, 8Jx, 8Kx, 8Nx, 8Qx, FGx, FNx, FSx, X4x, X5x • 7459-CTO, 5Ex, 67x, 68x, 69x, 6Bx, 6Dx, 6Fx, 6Gx, 6Jx, 6Lx, 6Qx, 6Wx, H3x, H4x, H5x, M4x • 2023-CTO • 2024-CTO • 7462-CTO, 42x, 46x, 47x, 48x, 49x, 4Ax, 4Bx, 4Jx, 4Kx, 4Qx, 4Tx, 4Ux, 4Xx, 4Yx, F6x, FBx, FJx, FLx, FNx, FQx, FSx, FTx, FUx, FVx • 7465-CTO, 23x, 24x, 25x, 26x, 27x, 2Ex, 2Fx, 2Lx, 2Mx, 2Qx, 2Rx, 2Ux, 2Vx, 2Wx, 2Xx, 3Nx, 3Px, 3Rx, 3Wx, D8x, D9x, DCx, DDx, DFx, DGx, DKx, G5x, G6x • 7466-CTO, 34x, 35x, 38x, 3Ax, 3Bx, 3Hx, 3Px, 3Qx, 3Rx, 3Sx, 99x, 9Kx, 9Rx, 9Xx, HCx, HDx, HEx • 7469-CTO, 55x, 56x, 57x, 58x, 5Ax, 5Cx, 5Ex, 5Gx, 5Hx, 5Qx, 5Rx, 5Ux, 5Vx, 77x, 78x, 7Cx, 7Dx, 7Nx, 7Qx, 7Yx, 8Ux, 8Zx, GBx, GCx • 7470-CTO, 5Gx, 5Hx, 62x, 65x, 69x, 6Ax, 6Bx, 6Dx, 6Hx, 6Lx, 6Rx, 6Sx, E2x • 2046-CTO • 2047-CTO	42T1309	*
13	SATA hard disk drive, 160 GB, 5,400 rpm • 7454-CTO, 25x, 26x, 29x, 2Lx, 2Nx, 2Qx, 2Rx, 2Ux, 2Vx, 2Xx, 2Yx, 32x, 33x, 92x, 95x, 97x, 98x, 9Fx, 9Hx, 9Lx, G6x, G7x, GDx • 7455-CTO, 35x, 36x, 39x, 3Ax, 3Dx, 3Jx, 3Kx, 3Px, 3Wx, D9x, DHx, F7x, F9x • 7457-CTO, 45x, 48x, 49x, 4Ax, 4Bx, 4Hx, 4Lx, 4Mx, 4Px, 4Qx, 4Vx • 7458-CTO, 2Rx, 52x, 54x, 55x, 56x, 59x, 5Dx, 5Jx, 5Px, 5Tx, 69x, 72x, 74x, 79x, 7Fx, 7Mx, 7Nx, 7Qx, 7Sx, 7Wx, 7Xx, 84x, 87x, 8Ax, 8Bx, 8Cx, 8Dx, 8Ex, 8Hx, 8Jx, 8Kx, 8Nx, 8Qx, FGx, FNx, FSx, X4x, X5x • 7459-CTO, 5Ex, 67x, 68x, 69x, 6Bx, 6Dx, 6Fx, 6Gx, 6Jx, 6Lx, 6Qx, 6Wx, H3x, H4x, H5x, M4x • 2023-CTO • 2024-CTO • 7462-CTO, 42x, 46x, 47x, 48x, 49x, 4Ax, 4Bx, 4Jx, 4Kx, 4Qx, 4Tx, 4Ux, 4Xx, 4Yx, F6x, FBx, FJx, FLx, FNx, FQx, FSx, FTx, FUx, FVx • 7465-CTO, 23x, 24x, 25x, 26x, 27x, 2Ex, 2Fx, 2Lx, 2Mx, 2Qx, 2Rx, 2Ux, 2Vx, 2Wx, 2Xx, 3Nx, 3Px, 3Rx, 3Wx, D8x, D9x, DCx, DDx, DFx, DGx, DKx, G5x, G6x • 7466-CTO, 34x, 35x, 38x, 3Ax, 3Bx, 3Hx, 3Px, 3Qx, 3Rx, 3Sx, 99x, 9Kx, 9Rx, 9Xx, HCx, HDx, HEx • 7469-CTO, 55x, 56x, 57x, 58x, 5Ax, 5Cx, 5Ex, 5Gx, 5Hx, 5Qx, 5Rx, 5Ux, 5Vx, 77x, 78x, 7Cx, 7Dx, 7Nx, 7Qx, 7Yx, 8Ux, 8Zx, GBx, GCx • 7470-CTO, 5Gx, 5Hx, 62x, 65x, 69x, 6Ax, 6Bx, 6Dx, 6Hx, 6Lx, 6Rx, 6Sx, E2x • 2046-CTO • 2047-CTO	42T1579	*

Downloaded from LpManual.com Manuals

Table 37. Parts list—Overall (continued)

No.	FRU	FRU no.	CRU ID
13	SATA hard disk drive, 160 GB, 5,400 rpm • 7454-CTO, 25x, 26x, 29x, 2Lx, 2Nx, 2Qx, 2Rx, 2Ux, 2Vx, 2Xx, 2Yx, 32x, 33x, 92x, 95x, 97x, 98x, 9Fx, 9Hx, 9Lx, G6x, G7x, GDx • 7455-CTO, 35x, 36x, 39x, 3Ax, 3Dx, 3Jx, 3Kx, 3Px, 3Wx, D9x, DHx, F7x, F9x • 7457-CTO, 45x, 48x, 49x, 4Ax, 4Bx, 4Hx, 4Lx, 4Mx, 4Px, 4Qx, 4Vx • 7458-CTO, 2Rx, 52x, 54x, 55x, 56x, 59x, 5Dx, 5Jx, 5Px, 5Tx, 69x, 72x, 74x, 79x, 7Fx, 7Mx, 7Nx, 7Qx, 7Sx, 7Wx, 7Xx, 84x, 87x, 8Ax, 8Bx, 8Cx, 8Dx, 8Ex, 8Hx, 8Jx, 8Kx, 8Nx, 8Qx, FGx, FNx, FSx, X4x, X5x • 7459-CTO, 5Ex, 67x, 68x, 69x, 6Bx, 6Dx, 6Fx, 6Gx, 6Jx, 6Lx, 6Qx, 6Wx, H3x, H4x, H5x, M4x • 2023-CTO • 2024-CTO • 7462-CTO, 42x, 46x, 47x, 48x, 49x, 4Ax, 4Bx, 4Jx, 4Kx, 4Qx, 4Tx, 4Ux, 4Xx, 4Yx, F6x, FBx, FJx, FLx, FNx, FQx, FSx, FTx, FUx, FVx • 7465-CTO, 23x, 24x, 25x, 26x, 27x, 2Ex, 2Fx, 2Lx, 2Mx, 2Qx, 2Rx, 2Ux, 2Vx, 2Wx, 2Xx, 3Nx, 3Px, 3Rx, 3Wx, D8x, D9x, DCx, DDx, DFx, DGx, DKx, G5x, G6x • 7466-CTO, 34x, 35x, 38x, 3Ax, 3Bx, 3Hx, 3Px, 3Qx, 3Rx, 3Sx, 99x, 9Kx, 9Rx, 9Xx, HCx, HDx, HEx • 7469-CTO, 55x, 56x, 57x, 58x, 5Ax, 5Cx, 5Ex, 5Gx, 5Hx, 5Qx, 5Rx, 5Ux, 5Vx, 77x, 78x, 7Cx, 7Dx, 7Nx, 7Qx, 7Yx, 8Ux, 8Zx, GBx, GCx • 7470-CTO, 5Gx, 5Hx, 62x, 65x, 69x, 6Ax, 6Bx, 6Dx, 6Hx, 6Lx, 6Rx, 6Sx, E2x • 2046-CTO • 2047-CTO • 3249-CTO • 3323-CTO, 53x • 3357-CTO • 3626-CTO • 3680-CTO • 3712-CTO • 4492-CTO • 5129-CTO • 5143-CTO • 5385-CTO • 5397-CTO • 5413-CTO • 5442-CTO • 5446-CTO	45N7215	*
13	SATA hard disk drive, 160 GB, 5,400 rpm • 7454-CTO, 25x, 26x, 29x, 2Lx, 2Nx, 2Qx, 2Rx, 2Ux, 2Vx, 2Xx, 2Yx, 32x, 33x, 92x, 95x, 97x, 98x, 9Fx, 9Hx, 9Lx, G6x, G7x, GDx • 7455-CTO, 35x, 36x, 39x, 3Ax, 3Dx, 3Jx, 3Kx, 3Px, 3Wx, D9x, DHx, F7x, F9x • 7457-CTO, 45x, 48x, 49x, 4Ax, 4Bx, 4Hx, 4Lx, 4Mx, 4Px, 4Qx, 4Vx • 7458-CTO, 2Rx, 52x, 54x, 55x, 56x, 59x, 5Dx, 5Jx, 5Px, 5Tx, 69x, 72x, 74x, 79x, 7Fx, 7Mx, 7Nx, 7Qx, 7Sx, 7Wx, 7Xx, 84x, 87x, 8Ax, 8Bx, 8Cx, 8Dx, 8Ex, 8Hx, 8Jx, 8Kx, 8Nx, 8Qx, FGx, FNx, FSx, X4x, X5x • 7459-CTO, 5Ex, 67x, 68x, 69x, 6Bx, 6Dx, 6Fx, 6Gx, 6Jx, 6Lx, 6Qx, 6Wx, H3x, H4x, H5x, M4x • 2023-CTO • 2024-CTO • 7462-CTO, 42x, 46x, 47x, 48x, 49x, 4Ax, 4Bx, 4Jx, 4Kx, 4Qx, 4Tx, 4Ux, 4Xx, 4Yx, F6x, FBx, FJx, FLx, FNx, FQx, FSx, FTx, FUx, FVx • 7465-CTO, 23x, 24x, 25x, 26x, 27x, 2Ex, 2Fx, 2Lx, 2Mx, 2Qx, 2Rx, 2Ux, 2Vx, 2Wx, 2Xx, 3Nx, 3Px, 3Rx, 3Wx, D8x, D9x, DCx, DDx, DFx, DGx, DKx, G5x, G6x • 7466-CTO, 34x, 35x, 38x, 3Ax, 3Bx, 3Hx, 3Px, 3Qx, 3Rx, 3Sx, 99x, 9Kx, 9Rx, 9Xx, HCx, HDx, HEx	45N7205	*

Downloaded from LpManual.com Manuals

Table 37. Parts list—Overall (continued)

No.	FRU	FRU no.	CRU ID
	• 7469-CTO, 55x, 56x, 57x, 58x, 5Ax, 5Cx, 5Ex, 5Gx, 5Hx, 5Qx, 5Rx, 5Ux, 5Vx, 77x, 78x, 7Cx, 7Dx, 7Nx, 7Qx, 7Yx, 8Ux, 8Zx, GBx, GCx • 7470-CTO, 5Gx, 5Hx, 62x, 65x, 69x, 6Ax, 6Bx, 6Dx, 6Hx, 6Lx, 6Rx, 6Sx, E2x • 2046-CTO • 2047-CTO • 3249-CTO • 3323-CTO, 53x • 3357-CTO • 3626-CTO • 3680-CTO • 3712-CTO • 4492-CTO • 5129-CTO • 5143-CTO • 5385-CTO • 5397-CTO • 5413-CTO • 5442-CTO • 5446-CTO		
13	SATA hard disk drive, 160 GB, 5,400 rpm • 7454-CTO, 25x, 26x, 29x, 2Lx, 2Nx, 2Qx, 2Rx, 2Ux, 2Vx, 2Xx, 2Yx, 32x, 33x, 92x, 95x, 97x, 98x, 9Fx, 9Hx, 9Lx, G6x, G7x, GDx • 7455-CTO, 35x, 36x, 39x, 3Ax, 3Dx, 3Jx, 3Kx, 3Px, 3Wx, D9x, DHx, F7x, F9x • 7457-CTO, 45x, 48x, 49x, 4Ax, 4Bx, 4Hx, 4Lx, 4Mx, 4Px, 4Qx, 4Vx • 7458-CTO, 2Rx, 52x, 54x, 55x, 56x, 59x, 5Dx, 5Jx, 5Px, 5Tx, 69x, 72x, 74x, 79x, 7Fx, 7Mx, 7Nx, 7Qx, 7Sx, 7Wx, 7Xx, 84x, 87x, 8Ax, 8Bx, 8Cx, 8Dx, 8Ex, 8Hx, 8Jx, 8Kx, 8Nx, 8Qx, FGx, FNx, FSx, X4x, X5x • 7459-CTO, 5Ex, 67x, 68x, 69x, 6Bx, 6Dx, 6Fx, 6Gx, 6Jx, 6Lx, 6Qx, 6Wx, H3x, H4x, H5x, M4x • 2023-CTO • 2024-CTO • 7462-CTO, 42x, 46x, 47x, 48x, 49x, 4Ax, 4Bx, 4Jx, 4Kx, 4Qx, 4Tx, 4Ux, 4Xx, 4Yx, F6x, FBx, FJx, FLx, FNx, FQx, FSx, FTx, FUx, FVx • 7465-CTO, 23x, 24x, 25x, 26x, 27x, 2Ex, 2Fx, 2Lx, 2Mx, 2Qx, 2Rx, 2Ux, 2Vx, 2Wx, 2Xx, 3Nx, 3Px, 3Rx, 3Wx, D8x, D9x, DCx, DDx, DFx, DGx, DKx, G5x, G6x • 7466-CTO, 34x, 35x, 38x, 3Ax, 3Bx, 3Hx, 3Px, 3Qx, 3Rx, 3Sx, 99x, 9Kx, 9Rx, 9Xx, HCx, HDx, HEx • 7469-CTO, 55x, 56x, 57x, 58x, 5Ax, 5Cx, 5Ex, 5Gx, 5Hx, 5Qx, 5Rx, 5Ux, 5Vx, 77x, 78x, 7Cx, 7Dx, 7Nx, 7Qx, 7Yx, 8Ux, 8Zx, GBx, GCx • 7470-CTO, 5Gx, 5Hx, 62x, 65x, 69x, 6Ax, 6Bx, 6Dx, 6Hx, 6Lx, 6Rx, 6Sx, E2x • 2046-CTO • 2047-CTO • 3249-CTO • 3323-CTO, 53x • 3357-CTO • 3626-CTO • 3680-CTO • 3712-CTO • 4492-CTO • 5129-CTO • 5143-CTO • 5385-CTO • 5397-CTO • 5413-CTO • 5442-CTO • 5446-CTO	45N7227	*

Downloaded from LpManual.com Manuals

Table 37. Parts list—Overall (continued)

No.	FRU	FRU no.	CRU ID
13	SATA hard disk drive, 160 GB, 7,200 rpm • 3249-CTO, C2x, MCx, MDx, ERx, 1Fx, 1Gx, 1Hx, 1Jx • 3323-CTO, MEx, MFx • 3357-CTO • 3626-CTO, 12x, 13x, RUx, RWx • 3680-CTO • 3712-CTO • 4492-CTO	45N7251	*
13	SATA hard disk drive, 160 GB, 7,200 rpm • 3249-CTO, C2x, MCx, MDx, ERx, 1Fx, 1Gx, 1Hx, 1Jx • 3323-CTO, MEx, MFx • 3357-CTO • 3626-CTO, 12x, 13x, RUx, RWx • 3680-CTO • 3712-CTO • 4492-CTO	45N7271	*
13	SATA hard disk drive, 250 GB, 5,400 rpm **OP** • 7454-CTO, 23x, 28x, 2Hx, 2Tx, 2Wx, 3Hx, 3Jx, 3Kx, 3Mx, 3Px, 3Tx, 3Yx, 3Zx, 9Bx, 9Cx, G4x, G5x, G8x, G9x, GFx, GGx, GHx, GKx, GLx, GMx • 7455-CTO, 33x, 3Cx, 3Lx, 3Mx, 3Sx, 3Tx, 3Zx, 44x, 47x, 48x, 49x, 4Kx, 4Lx, 4Mx, 4Tx, 4Wx, 4Xx, 83x, 8Fx, 8Hx, 8Kx, 8Nx, D5x, D6x, DAx, DCx, DDx, DEx, DGx, DNx, DPx, DRx, DSx, DTx, DUx, F2x, F3x, F4x, FBx, FCx, FDx, FEx, FPx, FQx, FTx, P6x, P7x, PDx • 7457-CTO, 44x, 47x, 4Dx, 4Jx, 4Kx, 4Nx, 4Rx, 4Sx, 4Tx, 4Ux, 4Wx, 52x, 55x • 7458-CTO, 26x, 28x, 53x, 57x, 5Ax, 5Bx, 5Lx, 5Qx, 5Rx, 78x, 7Gx, 7Jx, 7Px, 7Tx, 7Ux, 7Yx, 7Zx, 82x, 85x, 8Gx, F2x, F6x, F7x, FEx, FMx, FPx, FTx, FVx, FYx, G3x • 7459-CTO, 62x, 63x, 6Px, 6Vx, 6Xx, 6Yx, 73x, 74x, H6x, H7x, M2x • 2023-CTO • 2024-CTO • 7462-CTO, 22x, 23x, 24x, 25x, 27x, 28x, 29x, 2Ax, 2Cx, 2Ex, 2Gx, 43x, 44x, 45x, 4Cx, 4Dx, 4Ex, 4Fx, 4Gx, 4Hx, 4Lx, 4Rx, 4Sx, 4Vx, 4Wx, F2x, F3x, F4x, F5x, F7x, F8x, FAx, FCx, FDx, FFx, FKx • 7465-CTO, 28x, 29x, 2Dx, 2Nx, 2Px, 2Sx, 2Tx, 2Zx, 3Jx, 3Lx, 3Sx, 3Ux, 3Vx, 3Xx, 3Yx, D4x, D6x, D7x, DAx, DBx, DEx, G2x, G3x, G8x • 7466-CTO, 32x, 33x, 39x, 3Cx, 3Tx, 3Ux, 3Vx, 3Wx, 46x, 4Hx, 4Jx, 4Kx, 4Lx, 4Mx, 4Nx, 4Px, 4Qx, 4Sx, 4Vx, 53x, 54x, 57x, 59x, 5Ax, 5Bx, 5Cx, 5Dx, 5Ex, 5Fx, 5Gx, 5Hx, 5Kx, 5Rx, 5Tx, 5Vx, 5Wx, 5Xx, 5Yx, 5Zx, 95x, 96x, 9Bx, 9Hx, 9Jx, 9Lx, 9Mx, 9Px, 9Qx, 9Sx, 9Tx, 9Vx, 9Wx, 9Yx, 9Zx, DLx, DMx, F7x, F8x, F9x, FAx, FBx, FNx, FUx, FVx, FWx, FXx, H5x, H6x, H7x, H8x, H9x, HAx, N2x • 7469-CTO, 52x, 53x, 54x, 59x, 5Fx, 5Kx, 5Bx, 5Dx, 5Jx, 5Nx, 5Tx, 5Xx, 62x, 63x, 64x, 65x, 66x, 67x, 68x, 6Cx, 6Dx, 6Gx, 7Ax, 7Lx, 7Xx, 7Vx, 82x, 8Lx, 8Rx, 8Sx, 8Tx, 8Vx, 8Xx, 97x, 9Cx, 9Dx, 9Ex, E2x, G2x, G3x, G4x, G5x, G8x, G9x • 7470-CTO, 63x, 68x, 6Cx, 6Vx, 73x, 74x, 76x, 8Tx • 2046-CTO • 2047-CTO	42T1471	*

Downloaded from LpManual.com Manuals

Table 37. Parts list—Overall (continued)

No.	FRU	FRU no.	CRU ID
13	SATA hard disk drive, 250 GB, 5,400 rpm **OP** • 7454-CTO, 23x, 28x, 2Hx, 2Tx, 2Wx, 3Hx, 3Jx, 3Kx, 3Mx, 3Px, 3Tx, 3Yx, 3Zx, 9Bx, 9Cx, G4x, G5x, G8x, G9x, GFx, GGx, GHx, GKx, GLx, GMx • 7455-CTO, 33x, 3Cx, 3Lx, 3Mx, 3Sx, 3Tx, 3Zx, 44x, 47x, 48x, 49x, 4Kx, 4Lx, 4Mx, 4Tx, 4Wx, 4Xx, 83x, 8Fx, 8Hx, 8Kx, 8Nx, D5x, D6x, DAx, DCx, DDx, DEx, DGx, DNx, DPx, DRx, DSx, DTx, DUx, F2x, F3x, F4x, FBx, FCx, FDx, FEx, FPx, FQx, FTx, P6x, P7x, PDx • 7457-CTO, 44x, 47x, 4Dx, 4Jx, 4Kx, 4Nx, 4Rx, 4Sx, 4Tx, 4Ux, 4Wx, 52x, 55x • 7458-CTO, 26x, 28x, 53x, 57x, 5Ax, 5Bx, 5Lx, 5Qx, 5Rx, 78x, 7Gx, 7Jx, 7Px, 7Tx, 7Ux, 7Yx, 7Zx, 82x, 85x, 8Gx, F2x, F6x, F7x, FEx, FMx, FPx, FTx, FVx, FYx, G3x • 7459-CTO, 62x, 63x, 6Px, 6Vx, 6Xx, 6Yx, 73x, 74x, H6x, H7x, M2x • 2023-CTO • 2024-CTO • 7462-CTO, 22x, 23x, 24x, 25x, 27x, 28x, 29x, 2Ax, 2Cx, 2Ex, 2Gx, 43x, 44x, 45x, 4Cx, 4Dx, 4Ex, 4Fx, 4Gx, 4Hx, 4Lx, 4Rx, 4Sx, 4Vx, 4Wx, F2x, F3x, F4x, F5x, F7x, F8x, FAx, FCx, FDx, FFx, FKx • 7465-CTO, 28x, 29x, 2Dx, 2Nx, 2Px, 2Sx, 2Tx, 2Zx, 3Jx, 3Lx, 3Sx, 3Ux, 3Vx, 3Xx, 3Yx, D4x, D6x, D7x, DAx, DBx, DEx, G2x, G3x, G8x • 7466-CTO, 32x, 33x, 39x, 3Cx, 3Tx, 3Ux, 3Vx, 3Wx, 46x, 4Hx, 4Jx, 4Kx, 4Lx, 4Mx, 4Nx, 4Px, 4Qx, 4Sx, 4Vx, 53x, 54x, 57x, 59x, 5Ax, 5Bx, 5Cx, 5Dx, 5Ex, 5Fx, 5Gx, 5Hx, 5Kx, 5Rx, 5Tx, 5Vx, 5Wx, 5Xx, 5Yx, 5Zx, 95x, 96x, 9Bx, 9Hx, 9Jx, 9Lx, 9Mx, 9Px, 9Qx, 9Sx, 9Tx, 9Vx, 9Wx, 9Yx, 9Zx, DLx, DMx, F7x, F8x, F9x, FAx, FBx, FNx, FUx, FVx, FWx, FXx, H5x, H6x, H7x, H8x, H9x, HAx, N2x • 7469-CTO, 52x, 53x, 54x, 59x, 5Fx, 5Kx, 5Bx, 5Dx, 5Jx, 5Nx, 5Tx, 5Xx, 62x, 63x, 64x, 65x, 66x, 67x, 68x, 6Cx, 6Dx, 6Gx, 7Ax, 7Lx, 7Xx, 7Vx, 82x, 8Lx, 8Rx, 8Sx, 8Tx, 8Vx, 8Xx, 97x, 9Cx, 9Dx, 9Ex, E2x, G2x, G3x, G4x, G5x, G8x, G9x • 7470-CTO, 63x, 68x, 6Cx, 6Vx, 73x, 74x, 76x, 8Tx • 2046-CTO • 2047-CTO	42T1481	*
13	SATA hard disk drive, 250 GB, 5,400 rpm • 7454-CTO, 23x, 28x, 2Hx, 2Tx, 2Wx, 3Hx, 3Jx, 3Kx, 3Mx, 3Px, 3Tx, 3Yx, 3Zx, 9Bx, 9Cx, G4x, G5x, G8x, G9x, GFx, GGx, GHx, GKx, GLx, GMx • 7455-CTO, 33x, 3Cx, 3Lx, 3Mx, 3Sx, 3Tx, 3Zx, 44x, 47x, 48x, 49x, 4Kx, 4Lx, 4Mx, 4Tx, 4Wx, 4Xx, 83x, 8Fx, 8Hx, 8Kx, 8Nx, D5x, D6x, DAx, DCx, DDx, DEx, DGx, DNx, DPx, DRx, DSx, DTx, DUx, F2x, F3x, F4x, FBx, FCx, FDx, FEx, FPx, FQx, FTx, P6x, P7x, PDx • 7457-CTO, 44x, 47x, 4Dx, 4Jx, 4Kx, 4Nx, 4Rx, 4Sx, 4Tx, 4Ux, 4Wx, 52x, 55x • 7458-CTO, 26x, 28x, 53x, 57x, 5Ax, 5Bx, 5Lx, 5Qx, 5Rx, 78x, 7Gx, 7Jx, 7Px, 7Tx, 7Ux, 7Yx, 7Zx, 82x, 85x, 8Gx, F2x, F6x, F7x, FEx, FMx, FPx, FTx, FVx, FYx, G3x • 7459-CTO, 62x, 63x, 6Px, 6Vx, 6Xx, 6Yx, 73x, 74x, H6x, H7x, M2x • 2023-CTO • 2024-CTO • 7462-CTO, 22x, 23x, 24x, 25x, 27x, 28x, 29x, 2Ax, 2Cx, 2Ex, 2Gx, 43x, 44x, 45x, 4Cx, 4Dx, 4Ex, 4Fx, 4Gx, 4Hx, 4Lx, 4Rx, 4Sx, 4Vx, 4Wx, F2x, F3x, F4x, F5x, F7x, F8x, FAx, FCx, FDx, FFx, FKx • 7465-CTO, 28x, 29x, 2Dx, 2Nx, 2Px, 2Sx, 2Tx, 2Zx, 3Jx, 3Lx, 3Sx, 3Ux, 3Vx, 3Xx, 3Yx, D4x, D6x, D7x, DAx, DBx, DEx, G2x, G3x, G8x • 7466-CTO, 32x, 33x, 39x, 3Cx, 3Tx, 3Ux, 3Vx, 3Wx, 46x, 4Hx, 4Jx, 4Kx, 4Lx, 4Mx, 4Nx, 4Px, 4Qx, 4Sx, 4Vx, 53x, 54x, 57x, 59x, 5Ax, 5Bx, 5Cx, 5Dx, 5Ex, 5Fx, 5Gx, 5Hx, 5Kx, 5Rx, 5Tx, 5Vx, 5Wx, 5Xx, 5Yx, 5Zx, 95x, 96x, 9Bx, 9Hx, 9Jx, 9Lx, 9Mx, 9Px, 9Qx, 9Sx, 9Tx, 9Vx, 9Wx, 9Yx, 9Zx, DLx, DMx, F7x, F8x, F9x, FAx, FBx, FNx, FUx, FVx, FWx, FXx, H5x, H6x, H7x, H8x, H9x, HAx, N2x • 7469-CTO, 52x, 53x, 54x, 59x, 5Fx, 5Kx, 5Bx, 5Dx, 5Jx, 5Nx, 5Tx, 5Xx, 62x, 63x, 64x, 65x, 66x, 67x, 68x, 6Cx, 6Dx, 6Gx, 7Ax, 7Lx, 7Xx, 7Vx, 82x, 8Lx, 8Rx, 8Sx, 8Tx, 8Vx, 8Xx, 97x, 9Cx, 9Dx, 9Ex, E2x, G2x, G3x, G4x, G5x, G8x, G9x • 7470-CTO, 63x, 68x, 6Cx, 6Vx, 73x, 74x, 76x, 8Tx • 2046-CTO • 2047-CTO	42T1517	*

Downloaded from LpManual.com Manuals

Table 37. Parts list—Overall (continued)

No.	FRU	FRU no.	CRU ID
13	SATA hard disk drive, 250 GB, 5,400 rpm • 7454-CTO, 23x, 28x, 2Hx, 2Tx, 2Wx, 3Hx, 3Jx, 3Kx, 3Mx, 3Px, 3Tx, 3Yx, 3Zx, 9Bx, 9Cx, G4x, G5x, G8x, G9x, GFx, GGx, GHx, GKx, GLx, GMx • 7455-CTO, 33x, 3Cx, 3Lx, 3Mx, 3Sx, 3Tx, 3Zx, 44x, 47x, 48x, 49x, 4Kx, 4Lx, 4Mx, 4Tx, 4Wx, 4Xx, 83x, 8Fx, 8Hx, 8Kx, 8Nx, D5x, D6x, DAx, DCx, DDx, DEx, DGx, DNx, DPx, DRx, DSx, DTx, DUx, F2x, F3x, F4x, FBx, FCx, FDx, FEx, FPx, FQx, FTx, P6x, P7x, PDx • 7457-CTO, 44x, 47x, 4Dx, 4Jx, 4Kx, 4Nx, 4Rx, 4Sx, 4Tx, 4Ux, 4Wx, 52x, 55x • 7458-CTO, 26x, 28x, 53x, 57x, 5Ax, 5Bx, 5Lx, 5Qx, 5Rx, 78x, 7Gx, 7Jx, 7Px, 7Tx, 7Ux, 7Yx, 7Zx, 82x, 85x, 8Gx, F2x, F6x, F7x, FEx, FMx, FPx, FTx, FVx, FYx, G3x • 7459-CTO, 62x, 63x, 6Px, 6Vx, 6Xx, 6Yx, 73x, 74x, H6x, H7x, M2x • 2023-CTO • 2024-CTO • 7462-CTO, 22x, 23x, 24x, 25x, 27x, 28x, 29x, 2Ax, 2Cx, 2Ex, 2Gx, 43x, 44x, 45x, 4Cx, 4Dx, 4Ex, 4Fx, 4Gx, 4Hx, 4Lx, 4Rx, 4Sx, 4Vx, 4Wx, F2x, F3x, F4x, F5x, F7x, F8x, FAx, FCx, FDx, FFx, FKx • 7465-CTO, 28x, 29x, 2Dx, 2Nx, 2Px, 2Sx, 2Tx, 2Zx, 3Jx, 3Lx, 3Sx, 3Ux, 3Vx, 3Xx, 3Yx, D4x, D6x, D7x, DAx, DBx, DEx, G2x, G3x, G8x • 7466-CTO, 32x, 33x, 39x, 3Cx, 3Tx, 3Ux, 3Vx, 3Wx, 46x, 4Hx, 4Jx, 4Kx, 4Lx, 4Mx, 4Nx, 4Px, 4Qx, 4Sx, 4Vx, 53x, 54x, 57x, 59x, 5Ax, 5Bx, 5Cx, 5Dx, 5Ex, 5Fx, 5Gx, 5Hx, 5Kx, 5Rx, 5Tx, 5Vx, 5Wx, 5Xx, 5Yx, 5Zx, 95x, 96x, 9Bx, 9Hx, 9Jx, 9Lx, 9Mx, 9Px, 9Qx, 9Sx, 9Tx, 9Vx, 9Wx, 9Yx, 9Zx, DLx, DMx, F7x, F8x, F9x, FAx, FBx, FNx, FUx, FVx, FWx, FXx, H5x, H6x, H7x, H8x, H9x, HAx, N2x • 7469-CTO, 52x, 53x, 54x, 59x, 5Fx, 5Kx, 5Bx, 5Dx, 5Jx, 5Nx, 5Tx, 5Xx, 62x, 63x, 64x, 65x, 66x, 67x, 68x, 6Cx, 6Dx, 6Gx, 7Ax, 7Lx, 7Xx, 7Vx, 82x, 8Lx, 8Rx, 8Sx, 8Tx, 8Vx, 8Xx, 97x, 9Cx, 9Dx, 9Ex, E2x, G2x, G3x, G4x, G5x, G8x, G9x • 7470-CTO, 63x, 68x, 6Cx, 6Vx, 73x, 74x, 76x, 8Tx • 2046-CTO • 2047-CTO	42T1581	*
13	SATA hard disk drive, 250 GB, 5,400 rpm • 7454-CTO, 23x, 28x, 2Hx, 2Tx, 2Wx, 3Hx, 3Jx, 3Kx, 3Mx, 3Px, 3Tx, 3Yx, 3Zx, 9Bx, 9Cx, G4x, G5x, G8x, G9x, GFx, GGx, GHx, GKx, GLx, GMx • 7455-CTO, 33x, 3Cx, 3Lx, 3Mx, 3Sx, 3Tx, 3Zx, 44x, 47x, 48x, 49x, 4Kx, 4Lx, 4Mx, 4Tx, 4Wx, 4Xx, 83x, 8Fx, 8Hx, 8Kx, 8Nx, D5x, D6x, DAx, DCx, DDx, DEx, DGx, DNx, DPx, DRx, DSx, DTx, DUx, F2x, F3x, F4x, FBx, FCx, FDx, FEx, FPx, FQx, FTx, P6x, P7x, PDx • 7457-CTO, 44x, 47x, 4Dx, 4Jx, 4Kx, 4Nx, 4Rx, 4Sx, 4Tx, 4Ux, 4Wx, 52x, 55x • 7458-CTO, 26x, 28x, 53x, 57x, 5Ax, 5Bx, 5Lx, 5Qx, 5Rx, 78x, 7Gx, 7Jx, 7Px, 7Tx, 7Ux, 7Yx, 7Zx, 82x, 85x, 8Gx, F2x, F6x, F7x, FEx, FMx, FPx, FTx, FVx, FYx, G3x • 7459-CTO, 62x, 63x, 6Px, 6Vx, 6Xx, 6Yx, 73x, 74x, H6x, H7x, M2x • 2023-CTO • 2024-CTO • 7462-CTO, 22x, 23x, 24x, 25x, 27x, 28x, 29x, 2Ax, 2Cx, 2Ex, 2Gx, 43x, 44x, 45x, 4Cx, 4Dx, 4Ex, 4Fx, 4Gx, 4Hx, 4Lx, 4Rx, 4Sx, 4Vx, 4Wx, F2x, F3x, F4x, F5x, F7x, F8x, FAx, FCx, FDx, FFx, FKx • 7465-CTO, 28x, 29x, 2Dx, 2Nx, 2Px, 2Sx, 2Tx, 2Zx, 3Jx, 3Lx, 3Sx, 3Ux, 3Vx, 3Xx, 3Yx, D4x, D6x, D7x, DAx, DBx, DEx, G2x, G3x, G8x • 7466-CTO, 32x, 33x, 39x, 3Cx, 3Tx, 3Ux, 3Vx, 3Wx, 46x, 4Hx, 4Jx, 4Kx, 4Lx, 4Mx, 4Nx, 4Px, 4Qx, 4Sx, 4Vx, 53x, 54x, 57x, 59x, 5Ax, 5Bx, 5Cx, 5Dx, 5Ex, 5Fx, 5Gx, 5Hx, 5Kx, 5Rx, 5Tx, 5Vx, 5Wx, 5Xx, 5Yx, 5Zx, 95x, 96x, 9Bx, 9Hx, 9Jx, 9Lx, 9Mx, 9Px, 9Qx, 9Sx, 9Tx, 9Vx, 9Wx, 9Yx, 9Zx, DLx, DMx, F7x, F8x, F9x, FAx, FBx, FNx, FUx, FVx, FWx, FXx, H5x, H6x, H7x, H8x, H9x, HAx, N2x • 7469-CTO, 52x, 53x, 54x, 59x, 5Fx, 5Kx, 5Bx, 5Dx, 5Jx, 5Nx, 5Tx, 5Xx, 62x, 63x, 64x, 65x, 66x, 67x, 68x, 6Cx, 6Dx, 6Gx, 7Ax, 7Lx, 7Xx, 7Vx, 82x, 8Lx, 8Rx, 8Sx, 8Tx, 8Vx, 8Xx, 97x, 9Cx, 9Dx, 9Ex, E2x, G2x, G3x, G4x, G5x, G8x, G9x • 7470-CTO, 63x, 68x, 6Cx, 6Vx, 73x, 74x, 76x, 8Tx • 2046-CTO • 2047-CTO	45N7217	*

Downloaded from LpManual.com Manuals

Table 37. Parts list—Overall (continued)

No.	FRU	FRU no.	CRU ID
	• 3249-CTO, 2Ex, J2x, J4x, J6x, J7x, J9x, JAx, 2Rx, 2Sx, NRx, NSx, NTx, Nux, JFx, JHx, 35x, 3Ux, 37x, 3Wx, 38x, MGx, MHx, MJx, MKx, MLx, MMx, MNx, MPx, MUx, MVx, MWx, MXx, MYx, 2Xx, 2Yx, 2Zx, 39x, 3Ax, 3Dx, 3Ex, 3Fx, 3Gx, 3Kx, 3Lx, CBx, CCx, CDx, CEx, 3Yx, QLx, QPx, 1Bx, 1Cx, 1Dx, 1Ex • 3323-CTO, 5Bx, 5Cx, 5Dx, 5Ex, 5Kx, 5Lx, 5Mx, 5Nx, 5Ux, 5Vx, 5Wx, 5Yx, 65x, 66x, 67x, 68x, 6Dx, 6Ex, 6Fx, 6Gx, 6Mx, 6Nx, 6Px, 6Rx, 6Wx, 6Yx, 6Zx, 72x, 77x, 78x, 79x, 7Ax, B9x, BAx, BUx, BVx, JVx, JXx, K2x, K3x, K4x, K5x, LFx, M3x, M4x, NNx, NPx • 3357-CTO, 3Px, LNx • 3626-CTO, F8x, FBx, FCx, FDx, FGx, FHx, FLx, FMx, FNx, FYx, GKx, GLx, GMx, GNx, GPx, GRx, GSx, GXx, H2x, H3x, H4x, H5x, H6x, HDx, HMx, HZx, PZx, RXx, N2x, RYx, Q8x • 3680-CTO, F8x, FBx, PJx, P8x, P9x, PAx, PDx, PFx, PHx, N2x • 3712-CTO • 4492-CTO • 5129-CTO, 74x • 5143-CTO, 29x, 2Ax, 2Bx, 2Cx, 2Hx, 2Jx, 2Kx, 2Lx, 2Sx, 2Tx, 2Ux, 2Vx, 33x, 34x, 35x, 36x, 4Hx, 4Jx, 4Mx • 5385-CTO, D5x • 5397-CTO, F4x, F5x, F9x, FAx, FDx, FGx, FMx, FSx, FTx, FUx, FVx, GBx, GFx • 5413-CTO, FDx, FGx, L2x, L4x, L8x, LAx • 5442-CTO • 5446-CTO		
13	SATA hard disk drive, 250 GB, 5,400 rpm • 7454-CTO, 23x, 28x, 2Hx, 2Tx, 2Wx, 3Hx, 3Jx, 3Kx, 3Mx, 3Px, 3Tx, 3Yx, 3Zx, 9Bx, 9Cx, G4x, G5x, G8x, G9x, GFx, GGx, GHx, GKx, GLx, GMx • 7455-CTO, 33x, 3Cx, 3Lx, 3Mx, 3Sx, 3Tx, 3Zx, 44x, 47x, 48x, 49x, 4Kx, 4Lx, 4Mx, 4Tx, 4Wx, 4Xx, 83x, 8Fx, 8Hx, 8Kx, 8Nx, D5x, D6x, DAx, DCx, DDx, DEx, DGx, DNx, DPx, DRx, DSx, DTx, DUx, F2x, F3x, F4x, FBx, FCx, FDx, FEx, FPx, FQx, FTx, P6x, P7x, PDx • 7457-CTO, 44x, 47x, 4Dx, 4Jx, 4Kx, 4Nx, 4Rx, 4Sx, 4Tx, 4Ux, 4Wx, 52x, 55x • 7458-CTO, 26x, 28x, 53x, 57x, 5Ax, 5Bx, 5Lx, 5Qx, 5Rx, 78x, 7Gx, 7Jx, 7Px, 7Tx, 7Ux, 7Yx, 7Zx, 82x, 85x, 8Gx, F2x, F6x, F7x, FEx, FMx, FPx, FTx, FVx, FYx, G3x • 7459-CTO, 62x, 63x, 6Px, 6Vx, 6Xx, 6Yx, 73x, 74x, H6x, H7x, M2x • 2023-CTO • 2024-CTO • 7462-CTO, 22x, 23x, 24x, 25x, 27x, 28x, 29x, 2Ax, 2Cx, 2Ex, 2Gx, 43x, 44x, 45x, 4Cx, 4Dx, 4Ex, 4Fx, 4Gx, 4Hx, 4Lx, 4Rx, 4Sx, 4Vx, 4Wx, F2x, F3x, F4x, F5x, F7x, F8x, FAx, FCx, FDx, FFx, FKx • 7465-CTO, 28x, 29x, 2Dx, 2Nx, 2Px, 2Sx, 2Tx, 2Zx, 3Jx, 3Lx, 3Sx, 3Ux, 3Vx, 3Xx, 3Yx, D4x, D6x, D7x, DAx, DBx, DEx, G2x, G3x, G8x • 7466-CTO, 32x, 33x, 39x, 3Cx, 3Tx, 3Ux, 3Vx, 3Wx, 46x, 4Hx, 4Jx, 4Kx, 4Lx, 4Mx, 4Nx, 4Px, 4Qx, 4Sx, 4Vx, 53x, 54x, 57x, 59x, 5Ax, 5Bx, 5Cx, 5Dx, 5Ex, 5Fx, 5Gx, 5Hx, 5Kx, 5Rx, 5Tx, 5Vx, 5Wx, 5Xx, 5Yx, 5Zx, 95x, 96x, 9Bx, 9Hx, 9Jx, 9Lx, 9Mx, 9Px, 9Qx, 9Sx, 9Tx, 9Vx, 9Wx, 9Yx, 9Zx, DLx, DMx, F7x, F8x, F9x, FAx, FBx, FNx, FUx, FVx, FWx, FXx, H5x, H6x, H7x, H8x, H9x, HAx, N2x • 7469-CTO, 52x, 53x, 54x, 59x, 5Fx, 5Kx, 5Bx, 5Dx, 5Jx, 5Nx, 5Tx, 5Xx, 62x, 63x, 64x, 65x, 66x, 67x, 68x, 6Cx, 6Dx, 6Gx, 7Ax, 7Lx, 7Xx, 7Vx, 82x, 8Lx, 8Rx, 8Sx, 8Tx, 8Vx, 8Xx, 97x, 9Cx, 9Dx, 9Ex, E2x, G2x, G3x, G4x, G5x, G8x, G9x • 7470-CTO, 63x, 68x, 6Cx, 6Vx, 73x, 74x, 76x, 8Tx • 2046-CTO • 2047-CTO • 3249-CTO, 2Ex, J2x, J4x, J6x, J7x, J9x, JAx, 2Rx, 2Sx, NRx, NSx, NTx, Nux, JFx, JHx, 35x, 3Ux, 37x, 3Wx, 38x, MGx, MHx, MJx, MKx, MLx, MMx, MNx, MPx, MUx, MVx, MWx, MXx, MYx, 2Xx, 2Yx, 2Zx, 39x, 3Ax, 3Dx, 3Ex, 3Fx, 3Gx, 3Kx, 3Lx, CBx, CCx, CDx, CEx, 3Yx, QLx, QPx, 1Bx, 1Cx, 1Dx, 1Ex • 3323-CTO, 5Bx, 5Cx, 5Dx, 5Ex, 5Kx, 5Lx, 5Mx, 5Nx, 5Ux, 5Vx, 5Wx, 5Yx, 65x, 66x, 67x, 68x, 6Dx, 6Ex, 6Fx, 6Gx, 6Mx, 6Nx, 6Px, 6Rx, 6Wx, 6Yx, 6Zx, 72x, 77x, 78x, 79x, 7Ax, B9x, BAx, BUx, BVx, JVx, JXx, K2x, K3x, K4x, K5x, LFx, M3x, M4x, NNx, NPx • 3357-CTO, 3Px, LNx	45N7207	*

Downloaded from LpManual.com Manuals

Table 37. Parts list—Overall (continued)

No.	FRU	FRU no.	CRU ID
	• 3626-CTO, F8x, FBx, FCx, FDx, FGx, FHx, FLx, FMx, FNx, FYx, GKx, GLx, GMx, GNx, GPx, GRx, GSx, GXx, H2x, H3x, H4x, H5x, H6x, HDx, HMx, HZx, PZx, RXx, N2x, RYx, Q8x • 3680-CTO, F8x, FBx, PJx, P8x, P9x, PAx, PDx, PFx, PHx, N2x • 3712-CTO • 4492-CTO • 5129-CTO, 74x • 5143-CTO, 29x, 2Ax, 2Bx, 2Cx, 2Hx, 2Jx, 2Kx, 2Lx, 2Sx, 2Tx, 2Ux, 2Vx, 33x, 34x, 35x, 36x, 4Hx, 4Jx, 4Mx • 5385-CTO, D5x • 5397-CTO, F4x, F5x, F9x, FAx, FDx, FGx, FMx, FSx, FTx, FUx, FVx, GBx, GFx • 5413-CTO, FDx, FGx, L2x, L4x, L8x, LAx • 5442-CTO • 5446-CTO		
13	SATA hard disk drive, 250 GB, 5,400 rpm • 7454-CTO, 23x, 28x, 2Hx, 2Tx, 2Wx, 3Hx, 3Jx, 3Kx, 3Mx, 3Px, 3Tx, 3Yx, 3Zx, 9Bx, 9Cx, G4x, G5x, G8x, G9x, GFx, GGx, GHx, GKx, GLx, GMx • 7455-CTO, 33x, 3Cx, 3Lx, 3Mx, 3Sx, 3Tx, 3Zx, 44x, 47x, 48x, 49x, 4Kx, 4Lx, 4Mx, 4Tx, 4Wx, 4Xx, 83x, 8Fx, 8Hx, 8Kx, 8Nx, D5x, D6x, DAx, DCx, DDx, DEx, DGx, DNx, DPx, DRx, DSx, DTx, DUx, F2x, F3x, F4x, FBx, FCx, FDx, FEx, FPx, FQx, FTx, P6x, P7x, PDx • 7457-CTO, 44x, 47x, 4Dx, 4Jx, 4Kx, 4Nx, 4Rx, 4Sx, 4Tx, 4Ux, 4Wx, 52x, 55x • 7458-CTO, 26x, 28x, 53x, 57x, 5Ax, 5Bx, 5Lx, 5Qx, 5Rx, 78x, 7Gx, 7Jx, 7Px, 7Tx, 7Ux, 7Yx, 7Zx, 82x, 85x, 8Gx, F2x, F6x, F7x, FEx, FMx, FPx, FTx, FVx, FYx, G3x • 7459-CTO, 62x, 63x, 6Px, 6Vx, 6Xx, 6Yx, 73x, 74x, H6x, H7x, M2x • 2023-CTO • 2024-CTO • 7462-CTO, 22x, 23x, 24x, 25x, 27x, 28x, 29x, 2Ax, 2Cx, 2Ex, 2Gx, 43x, 44x, 45x, 4Cx, 4Dx, 4Ex, 4Fx, 4Gx, 4Hx, 4Lx, 4Rx, 4Sx, 4Vx, 4Wx, F2x, F3x, F4x, F5x, F7x, F8x, FAx, FCx, FDx, FFx, FKx • 7465-CTO, 28x, 29x, 2Dx, 2Nx, 2Px, 2Sx, 2Tx, 2Zx, 3Jx, 3Lx, 3Sx, 3Ux, 3Vx, 3Xx, 3Yx, D4x, D6x, D7x, DAx, DBx, DEx, G2x, G3x, G8x • 7466-CTO, 32x, 33x, 39x, 3Cx, 3Tx, 3Ux, 3Vx, 3Wx, 46x, 4Hx, 4Jx, 4Kx, 4Lx, 4Mx, 4Nx, 4Px, 4Qx, 4Sx, 4Vx, 53x, 54x, 57x, 59x, 5Ax, 5Bx, 5Cx, 5Dx, 5Ex, 5Fx, 5Gx, 5Hx, 5Kx, 5Rx, 5Tx, 5Vx, 5Wx, 5Xx, 5Yx, 5Zx, 95x, 96x, 9Bx, 9Hx, 9Jx, 9Lx, 9Mx, 9Px, 9Qx, 9Sx, 9Tx, 9Vx, 9Wx, 9Yx, 9Zx, DLx, DMx, F7x, F8x, F9x, FAx, FBx, FNx, FUx, FVx, FWx, FXx, H5x, H6x, H7x, H8x, H9x, HAx, N2x • 7469-CTO, 52x, 53x, 54x, 59x, 5Fx, 5Kx, 5Bx, 5Dx, 5Jx, 5Nx, 5Tx, 5Xx, 62x, 63x, 64x, 65x, 66x, 67x, 68x, 6Cx, 6Dx, 6Gx, 7Ax, 7Lx, 7Xx, 7Vx, 82x, 8Lx, 8Rx, 8Sx, 8Tx, 8Vx, 8Xx, 97x, 9Cx, 9Dx, 9Ex, E2x, G2x, G3x, G4x, G5x, G8x, G9x • 7470-CTO, 63x, 68x, 6Cx, 6Vx, 73x, 74x, 76x, 8Tx • 2046-CTO • 2047-CTO • 3249-CTO, 2Ex, J2x, J4x, J6x, J7x, J9x, JAx, 2Rx, 2Sx, NRx, NSx, NTx, Nux, JFx, JHx, 35x, 3Ux, 37x, 3Wx, 38x, MGx, MHx, MJx, MKx, MLx, MMx, MNx, MPx, MUx, MVx, MWx, MXx, MYx, 2Xx, 2Yx, 2Zx, 39x, 3Ax, 3Dx, 3Ex, 3Fx, 3Gx, 3Kx, 3Lx, CBx, CCx, CDx, CEx, 3Yx, QLx, QPx, 1Bx, 1Cx, 1Dx, 1Ex • 3323-CTO, 5Bx, 5Cx, 5Dx, 5Ex, 5Kx, 5Lx, 5Mx, 5Nx, 5Ux, 5Vx, 5Wx, 5Yx, 65x, 66x, 67x, 68x, 6Dx, 6Ex, 6Fx, 6Gx, 6Mx, 6Nx, 6Px, 6Rx, 6Wx, 6Yx, 6Zx, 72x, 77x, 78x, 79x, 7Ax, B9x, BAx, BUx, BVx, JVx, JXx, K2x, K3x, K4x, K5x, LFx, M3x, M4x, NNx, NPx • 3357-CTO, 3Px, LNx • 3626-CTO, F8x, FBx, FCx, FDx, FGx, FHx, FLx, FMx, FNx, FYx, GKx, GLx, GMx, GNx, GPx, GRx, GSx, GXx, H2x, H3x, H4x, H5x, H6x, HDx, HMx, HZx, PZx, RXx, N2x, RYx, Q8x • 3680-CTO, F8x, FBx, PJx, P8x, P9x, PAx, PDx, PFx, PHx, N2x • 3712-CTO • 4492-CTO • 5129-CTO, 74x • 5143-CTO, 29x, 2Ax, 2Bx, 2Cx, 2Hx, 2Jx, 2Kx, 2Lx, 2Sx, 2Tx, 2Ux, 2Vx, 33x, 34x, 35x, 36x, 4Hx, 4Jx, 4Mx	45N7229	*

Downloaded from LpManual.com Manuals

Table 37. Parts list—Overall (continued)

No.	FRU	FRU no.	CRU ID
	• 5385-CTO, D5x • 5397-CTO, F4x, F5x, F9x, FAx, FDx, FGx, FMx, FSx, FTx, FUx, FVx, GBx, GFx • 5413-CTO, FDx, FGx, L2x, L4x, L8x, LAx • 5442-CTO • 5446-CTO		
13	SATA hard disk drive, 320 GB, 5,400 rpm **OP** • 7454-CTO, 3Lx, 3Rx, 9Kx, G4x • 7455-CTO, 3Hx, 3Nx, 3Vx, 3Xx, 3Yx, 45x, 4Bx, 4Cx, 4Hx, 4Jx, 4Nx, 4Px, 4Ux, 4Vx, 4Yx, 4Zx, 82x, 84x, 8Bx, 8Gx, 8Jx, 8Lx, 8Mx, 8Px, 8Qx, 8Rx, 8Sx, 8Tx, 8Vx, D2x, D3x, D7x, D8x, DBx, DFx, DJx, DKx, DQx, DVx, DWx, F5x, FFx, FGx, FKx, FLx, FMx, FNx, FRx, FUx, FVx, FZx, N3x, N4x, N5x, P3x, P4x, PAx, PEx • 7457-CTO, 53x, 56x • 7458-CTO, 24x, 25x, 2Fx, 2Kx, 4Xx, 62x, 63x, 66x, 6Qx, 6Rx, 6Sx, 6Zx, 7Lx, 7Vx, 8Xx, 8Yx, 8Zx, E2x, F4x, F9x, FAx, FHx, FJx, G7x, G8x, G9x, GEx • 7459-CTO, 5Fx, 6Tx, 6Ux, 75x, H2x, M3x • 2023-CTO • 2024-CTO • 7462-CTO, 26x, 2Bx, 2Dx, 2Fx, 2Hx, F9x, FEx, FGx, FHx, FMx, FPx, FRx • 7465-CTO, 3Tx, 3Zx, DHx, DJx, G4x, G7x, G9x, GAx, GBx • 7466-CTO,3Xx, 3Yx, 3Zx, 47x, 4Bx, 4Rx, 4Tx, 4Ux, 4Wx, 4Xx, 55x, 56x, 58x, 5Jx, 5Lx, 5Mx, 5Nx, 5Px, 5Qx, 5Sx, 5Ux, 92x, 97x, 98x, 9Cx, 9Dx, 9Ex, 9Fx, 9Gx, 9Nx, 9Ux, FFx, FGx, FHx, FJx, FKx, FLx, FMx, FPx, FRx, FYx, FZx, H2x, H3x, H4x, HBx • 7469-CTO, 69x, 6Ax, 6Bx, 6Ex, 6Kx, 6Tx, 7Bx, 7Px, 88x, 8Ax, 8Cx, 8Dx, 8Ex, 8Fx, 8Kx, 8Mx, 8Nx, 8Px, 8Wx, 8Yx, 93x, 94x, 98x, 99x, 9Ax, 9Bx, G6x, G7x • 7470-CTO, 64x, 6Gx, 6Nx, 6Qx, 6Tx, 75x, 77x, 8Ux, 8Zx • 2046-CTO • 2047-CTO	42T1507	*
13	SATA hard disk drive, 320 GB, 5,400 rpm **OP** • 7454-CTO, 3Lx, 3Rx, 9Kx, G4x • 7455-CTO, 3Hx, 3Nx, 3Vx, 3Xx, 3Yx, 45x, 4Bx, 4Cx, 4Hx, 4Jx, 4Nx, 4Px, 4Ux, 4Vx, 4Yx, 4Zx, 82x, 84x, 8Bx, 8Gx, 8Jx, 8Lx, 8Mx, 8Px, 8Qx, 8Rx, 8Sx, 8Tx, 8Vx, D2x, D3x, D7x, D8x, DBx, DFx, DJx, DKx, DQx, DVx, DWx, F5x, FFx, FGx, FKx, FLx, FMx, FNx, FRx, FUx, FVx, FZx, N3x, N4x, N5x, P3x, P4x, PAx, PEx • 7457-CTO, 53x, 56x • 7458-CTO, 24x, 25x, 2Fx, 2Kx, 4Xx, 62x, 63x, 66x, 6Qx, 6Rx, 6Sx, 6Zx, 7Lx, 7Vx, 8Xx, 8Yx, 8Zx, E2x, F4x, F9x, FAx, FHx, FJx, G7x, G8x, G9x, GEx • 7459-CTO, 5Fx, 6Tx, 6Ux, 75x, H2x, M3x • 2023-CTO • 2024-CTO • 7462-CTO, 26x, 2Bx, 2Dx, 2Fx, 2Hx, F9x, FEx, FGx, FHx, FMx, FPx, FRx • 7465-CTO, 3Tx, 3Zx, DHx, DJx, G4x, G7x, G9x, GAx, GBx • 7466-CTO,3Xx, 3Yx, 3Zx, 47x, 4Bx, 4Rx, 4Tx, 4Ux, 4Wx, 4Xx, 55x, 56x, 58x, 5Jx, 5Lx, 5Mx, 5Nx, 5Px, 5Qx, 5Sx, 5Ux, 92x, 97x, 98x, 9Cx, 9Dx, 9Ex, 9Fx, 9Gx, 9Nx, 9Ux, FFx, FGx, FHx, FJx, FKx, FLx, FMx, FPx, FRx, FYx, FZx, H2x, H3x, H4x, HBx • 7469-CTO, 69x, 6Ax, 6Bx, 6Ex, 6Kx, 6Tx, 7Bx, 7Px, 88x, 8Ax, 8Cx, 8Dx, 8Ex, 8Fx, 8Kx, 8Mx, 8Nx, 8Px, 8Wx, 8Yx, 93x, 94x, 98x, 99x, 9Ax, 9Bx, G6x, G7x • 7470-CTO, 64x, 6Gx, 6Nx, 6Qx, 6Tx, 75x, 77x, 8Ux, 8Zx • 2046-CTO • 2047-CTO	42T1535	*

Downloaded from LpManual.com Manuals

Table 37. Parts list—Overall (continued)

No.	FRU	FRU no.	CRU ID
13	SATA hard disk drive, 320 GB, 5,400 rpm • 7454-CTO, 3Lx, 3Rx, 9Kx, G4x • 7455-CTO, 3Hx, 3Nx, 3Vx, 3Xx, 3Yx, 45x, 4Bx, 4Cx, 4Hx, 4Jx, 4Nx, 4Px, 4Ux, 4Vx, 4Yx, 4Zx, 82x, 84x, 8Bx, 8Gx, 8Jx, 8Lx, 8Mx, 8Px, 8Qx, 8Rx, 8Sx, 8Tx, 8Vx, D2x, D3x, D7x, D8x, DBx, DFx, DJx, DKx, DQx, DVx, DWx, F5x, FFx, FGx, FKx, FLx, FMx, FNx, FRx, FUx, FVx, FZx, N3x, N4x, N5x, P3x, P4x, PAx, PEx • 7457-CTO, 53x, 56x • 7458-CTO, 24x, 25x, 2Fx, 2Kx, 4Xx, 62x, 63x, 66x, 6Qx, 6Rx, 6Sx, 6Zx, 7Lx, 7Vx, 8Xx, 8Yx, 8Zx, E2x, F4x, F9x, FAx, FHx, FJx, G7x, G8x, G9x, GEx • 7459-CTO, 5Fx, 6Tx, 6Ux, 75x, H2x, M3x • 2023-CTO • 2024-CTO • 7462-CTO, 26x, 2Bx, 2Dx, 2Fx, 2Hx, F9x, FEx, FGx, FHx, FMx, FPx, FRx • 7465-CTO, 3Tx, 3Zx, DHx, DJx, G4x, G7x, G9x, GAx, GBx • 7466-CTO,3Xx, 3Yx, 3Zx, 47x, 4Bx, 4Rx, 4Tx, 4Ux, 4Wx, 4Xx, 55x, 56x, 58x, 5Jx, 5Lx, 5Mx, 5Nx, 5Px, 5Qx, 5Sx, 5Ux, 92x, 97x, 98x, 9Cx, 9Dx, 9Ex, 9Fx, 9Gx, 9Nx, 9Ux, FFx, FGx, FHx, FJx, FKx, FLx, FMx, FPx, FRx, FYx, FZx, H2x, H3x, H4x, HBx • 7469-CTO, 69x, 6Ax, 6Bx, 6Ex, 6Kx, 6Tx, 7Bx, 7Px, 88x, 8Ax, 8Cx, 8Dx, 8Ex, 8Fx, 8Kx, 8Mx, 8Nx, 8Px, 8Wx, 8Yx, 93x, 94x, 98x, 99x, 9Ax, 9Bx, G6x, G7x • 7470-CTO, 64x, 6Gx, 6Nx, 6Qx, 6Tx, 75x, 77x, 8Ux, 8Zx • 2046-CTO • 2047-CTO	42T1583	*
13	SATA hard disk drive, 320 GB, 5,400 rpm • 7454-CTO, 3Lx, 3Rx, 9Kx, G4x • 7455-CTO, 3Hx, 3Nx, 3Vx, 3Xx, 3Yx, 45x, 4Bx, 4Cx, 4Hx, 4Jx, 4Nx, 4Px, 4Ux, 4Vx, 4Yx, 4Zx, 82x, 84x, 8Bx, 8Gx, 8Jx, 8Lx, 8Mx, 8Px, 8Qx, 8Rx, 8Sx, 8Tx, 8Vx, D2x, D3x, D7x, D8x, DBx, DFx, DJx, DKx, DQx, DVx, DWx, F5x, FFx, FGx, FKx, FLx, FMx, FNx, FRx, FUx, FVx, FZx, N3x, N4x, N5x, P3x, P4x, PAx, PEx • 7457-CTO, 53x, 56x • 7458-CTO, 24x, 25x, 2Fx, 2Kx, 4Xx, 62x, 63x, 66x, 6Qx, 6Rx, 6Sx, 6Zx, 7Lx, 7Vx, 8Xx, 8Yx, 8Zx, E2x, F4x, F9x, FAx, FHx, FJx, G7x, G8x, G9x, GEx • 7459-CTO, 5Fx, 6Tx, 6Ux, 75x, H2x, M3x • 2023-CTO • 2024-CTO • 7462-CTO, 26x, 2Bx, 2Dx, 2Fx, 2Hx, F9x, FEx, FGx, FHx, FMx, FPx, FRx • 7465-CTO, 3Tx, 3Zx, DHx, DJx, G4x, G7x, G9x, GAx, GBx • 7466-CTO,3Xx, 3Yx, 3Zx, 47x, 4Bx, 4Rx, 4Tx, 4Ux, 4Wx, 4Xx, 55x, 56x, 58x, 5Jx, 5Lx, 5Mx, 5Nx, 5Px, 5Qx, 5Sx, 5Ux, 92x, 97x, 98x, 9Cx, 9Dx, 9Ex, 9Fx, 9Gx, 9Nx, 9Ux, FFx, FGx, FHx, FJx, FKx, FLx, FMx, FPx, FRx, FYx, FZx, H2x, H3x, H4x, HBx • 7469-CTO, 69x, 6Ax, 6Bx, 6Ex, 6Kx, 6Tx, 7Bx, 7Px, 88x, 8Ax, 8Cx, 8Dx, 8Ex, 8Fx, 8Kx, 8Mx, 8Nx, 8Px, 8Wx, 8Yx, 93x, 94x, 98x, 99x, 9Ax, 9Bx, G6x, G7x • 7470-CTO, 64x, 6Gx, 6Nx, 6Qx, 6Tx, 75x, 77x, 8Ux, 8Zx • 2046-CTO • 2047-CTO • 3249-CTO, 23x, 24x, 27x, 29x, 2Bx, 2Cx, 2Jx, 2Kx, J3x, J5x, J8x, JGx, JJx, JKx, JLx, JMx, JNx, JQx, JRx, 33x, 3Sx, 34x, 3Tx, 36x, 3Vx, NVx, MZx, 2Wx, 3Bx, 3Cx, 3Hx, 3Jx, 3Mx, 3Nx, CFx, CGx, QBx, QMx, QNx, QRx • 3323-CTO, 1Zx, 3Zx, 42x, 44x, 49x, 4Ex, 4Fx, 4Gx, 4Kx, 4Lx, 4Mx, 4Nx, 4Ux, 4Yx, 4Zx, 54x, 55x, 56x, 57x, 5Fx, 5Gx, 5Hx, 5Jx, 5Px, 5Rx, 5Sx, 5Tx, 5Zx, 62x, 63x, 64x, 69x, 6Ax, 6Bx, 6Cx, 6Hx, 6Jx, 6Kx, 6Lx, 6Sx, 6Tx, 6Ux, 6Vx, 73x, 74x, 75x, 76x, 7Bx, 7Cx, 7Dx, 7Ex, 7Fx, 7Gx, 7Hx, 7Jx, 7Kx, 7Lx, 7Mx, 7Nx, 7Px, 7Rx, 7Sx, 7Tx, 7Ux, 7Vx, 7Wx, 7Xx, 7Yx, 7Zx, 82x, 85x, 86x, 87x, 8Bx, 8Cx, 8Dx, 8Zx, 92x, 95x, 96x, 97x, 98x, 99x, 9Cx, 9Ex, 9Gx, 9Hx, 9Jx, 9Kx, 9Lx, 9Mx, 9Nx, 9Px, 9Rx, AAx, ABx, AVx, AWx, AXx, AYx, AZx, B2x, B3x, B4x, B5x, B6x, BBx, BGx, BHx, BJx, BSx, BTx, C4x, C5x, C6x, C7x, C9x, CAx, DKx, EZx, JDx, JEx, JWx, JYx, JZx, K6x, K7x, K8x, K9x, KUx, KVx, KWx, KYx, KZx, L2x, L7x, LBx, LCx, LDx, LEx, LHx, LJx, LKx, LLx, LPx, LRx, LSx, LTx, LXx, LZx, M5x, M7x,	45N7219	*

Downloaded from LpManual.com Manuals

Table 37. Parts list—Overall (continued)

No.	FRU	FRU no.	CRU ID
	M8x, M9x, N2x, N3x, N4x, N6x, N7x, NEx, NFx, NGx, NHx, NJx, NKx, NLx, NWx, NYx, QUx, QVx, QWx, QYx, QZx, R2x • 3357-CTO, D4x, D6x • 3626-CTO, 17x, 18x, 19x, F4x, FEx, FFx, FJx, FKx, G2x, G3x, G4x, G5x, G9x, GAx, GBx, GTx, HEx, HWx, HXx, Hyx, QFx, R4x, R8x, R9x • 3680-CTO, HSx, P2x, P3x, P4x, P7x, PEx, Q6x • 3712-CTO • 4492-CTO • 5129-CTO, 75x, R1x • 5143-CTO, 2Dx, 2Ex, 2Fx, 2Gx, 2Mx, 2Nx, 2Px, 2Rx, 2Wx, 2Yx, 2Zx, 32x, 37x, 38x, 39x, 3Ax, 3Zx, 42x, 43x, 4Gx • 5385-CTO, D2x, D3x, D6x • 5397-CTO, F2x, F3x, F6x, F8x, FCx, FHx, FJx, FWx, FXx, FYx, FZx • 5413-CTO, L3x, L5x, L9x • 5442-CTO • 5446-CTO		
13	SATA hard disk drive, 320 GB, 5,400 rpm • 7454-CTO, 3Lx, 3Rx, 9Kx, G4x • 7455-CTO, 3Hx, 3Nx, 3Vx, 3Xx, 3Yx, 45x, 4Bx, 4Cx, 4Hx, 4Jx, 4Nx, 4Px, 4Ux, 4Vx, 4Yx, 4Zx, 82x, 84x, 8Bx, 8Gx, 8Jx, 8Lx, 8Mx, 8Px, 8Qx, 8Rx, 8Sx, 8Tx, 8Vx, D2x, D3x, D7x, D8x, DBx, DFx, DJx, DKx, DQx, DVx, DWx, F5x, FFx, FGx, FKx, FLx, FMx, FNx, FRx, FUx, FVx, FZx, N3x, N4x, N5x, P3x, P4x, PAx, PEx • 7457-CTO, 53x, 56x • 7458-CTO, 24x, 25x, 2Fx, 2Kx, 4Xx, 62x, 63x, 66x, 6Qx, 6Rx, 6Sx, 6Zx, 7Lx, 7Vx, 8Xx, 8Yx, 8Zx, E2x, F4x, F9x, FAx, FHx, FJx, G7x, G8x, G9x, GEx • 7459-CTO, 5Fx, 6Tx, 6Ux, 75x, H2x, M3x • 2023-CTO • 2024-CTO • 7462-CTO, 26x, 2Bx, 2Dx, 2Fx, 2Hx, F9x, FEx, FGx, FHx, FMx, FPx, FRx • 7465-CTO, 3Tx, 3Zx, DHx, DJx, G4x, G7x, G9x, GAx, GBx • 7466-CTO,3Xx, 3Yx, 3Zx, 47x, 4Bx, 4Rx, 4Tx, 4Ux, 4Wx, 4Xx, 55x, 56x, 58x, 5Jx, 5Lx, 5Mx, 5Nx, 5Px, 5Qx, 5Sx, 5Ux, 92x, 97x, 98x, 9Cx, 9Dx, 9Ex, 9Fx, 9Gx, 9Nx, 9Ux, FFx, FGx, FHx, FJx, FKx, FLx, FMx, FPx, FRx, FYx, FZx, H2x, H3x, H4x, HBx • 7469-CTO, 69x, 6Ax, 6Bx, 6Ex, 6Kx, 6Tx, 7Bx, 7Px, 88x, 8Ax, 8Cx, 8Dx, 8Ex, 8Fx, 8Kx, 8Mx, 8Nx, 8Px, 8Wx, 8Yx, 93x, 94x, 98x, 99x, 9Ax, 9Bx, G6x, G7x • 7470-CTO, 64x, 6Gx, 6Nx, 6Qx, 6Tx, 75x, 77x, 8Ux, 8Zx • 2046-CTO • 2047-CTO • 3249-CTO, 23x, 24x, 27x, 29x, 2Bx, 2Cx, 2Jx, 2Kx, J3x, J5x, J8x, JGx, JJx, JKx, JLx, JMx, JNx, JQx, JRx, 33x, 3Sx, 34x, 3Tx, 36x, 3Vx, NVx, MZx, 2Wx, 3Bx, 3Cx, 3Hx, 3Jx, 3Mx, 3Nx, CFx, CGx, QBx, QMx, QNx, QRx • 3323-CTO, 1Zx, 3Zx, 42x, 44x, 49x, 4Ex, 4Fx, 4Gx, 4Kx, 4Lx, 4Mx, 4Nx, 4Ux, 4Yx, 4Zx, 54x, 55x, 56x, 57x, 5Fx, 5Gx, 5Hx, 5Jx, 5Px, 5Rx, 5Sx, 5Tx, 5Zx, 62x, 63x, 64x, 69x, 6Ax, 6Bx, 6Cx, 6Hx, 6Jx, 6Kx, 6Lx, 6Sx, 6Tx, 6Ux, 6Vx, 73x, 74x, 75x, 76x, 7Bx, 7Cx, 7Dx, 7Ex, 7Fx, 7Gx, 7Hx, 7Jx, 7Kx, 7Lx, 7Mx, 7Nx, 7Px, 7Rx, 7Sx, 7Tx, 7Ux, 7Vx, 7Wx, 7Xx, 7Yx, 7Zx, 82x, 85x, 86x, 87x, 8Bx, 8Cx, 8Dx, 8Zx, 92x, 95x, 96x, 97x, 98x, 99x, 9Cx, 9Ex, 9Gx, 9Hx, 9Jx, 9Kx, 9Lx, 9Mx, 9Nx, 9Px, 9Rx, AAx, ABx, AVx, AWx, AXx, AYx, AZx, B2x, B3x, B4x, B5x, B6x, BBx, BGx, BHx, BJx, BSx, BTx, C4x, C5x, C6x, C7x, C9x, CAx, DKx, EZx, JDx, JEx, JWx, JYx, JZx, K6x, K7x, K8x, K9x, KUx, KVx, KWx, KYx, KZx, L2x, L7x, LBx, LCx, LDx, LEx, LHx, LJx, LKx, LLx, LPx, LRx, LSx, LTx, LXx, LZx, M5x, M7x, M8x, M9x, N2x, N3x, N4x, N6x, N7x, NEx, NFx, NGx, NHx, NJx, NKx, NLx, NWx, NYx, QUx, QVx, QWx, QYx, QZx, R2x • 3357-CTO, D4x, D6x • 3626-CTO, 17x, 18x, 19x, F4x, FEx, FFx, FJx, FKx, G2x, G3x, G4x, G5x, G9x, GAx, GBx, GTx, HEx, HWx, HXx, Hyx, QFx, R4x, R8x, R9x • 3680-CTO, HSx, P2x, P3x, P4x, P7x, PEx, Q6x • 3712-CTO	45N7209	*

Downloaded from LpManual.com Manuals

Table 37. Parts list—Overall (continued)

No.	FRU	FRU no.	CRU ID
	• 4492-CTO • 5129-CTO, 75x, R1x • 5143-CTO, 2Dx, 2Ex, 2Fx, 2Gx, 2Mx, 2Nx, 2Px, 2Rx, 2Wx, 2Yx, 2Zx, 32x, 37x, 38x, 39x, 3Ax, 3Zx, 42x, 43x, 4Gx • 5385-CTO, D2x, D3x, D6x • 5397-CTO, F2x, F3x, F6x, F8x, FCx, FHx, FJx, FWx, FXx, FYx, FZx • 5413-CTO, L3x, L5x, L9x • 5442-CTO • 5446-CTO		
13	SATA hard disk drive, 320 GB, 5,400 rpm • 3249-CTO, 23x, 24x, 27x, 29x, 2Bx, 2Cx, 2Jx, 2Kx, J3x, J5x, J8x, JGx, JJx, JKx, JLx, JMx, JNx, JQx, JRx, 33x, 3Sx, 34x, 3Tx, 36x, 3Vx, NVx, MZx, 2Wx, 3Bx, 3Cx, 3Hx, 3Jx, 3Mx, 3Nx, CFx, CGx, QBx, QMx, QNx, QRx • 3323-CTO, 1Zx, 3Zx, 42x, 44x, 49x, 4Ex, 4Fx, 4Gx, 4Kx, 4Lx, 4Mx, 4Nx, 4Ux, 4Yx, 4Zx, 54x, 55x, 56x, 57x, 5Fx, 5Gx, 5Hx, 5Jx, 5Px, 5Rx, 5Sx, 5Tx, 5Zx, 62x, 63x, 64x, 69x, 6Ax, 6Bx, 6Cx, 6Hx, 6Jx, 6Kx, 6Lx, 6Sx, 6Tx, 6Ux, 6Vx, 73x, 74x, 75x, 76x, 7Bx, 7Cx, 7Dx, 7Ex, 7Fx, 7Gx, 7Hx, 7Jx, 7Kx, 7Lx, 7Mx, 7Nx, 7Px, 7Rx, 7Sx, 7Tx, 7Ux, 7Vx, 7Wx, 7Xx, 7Yx, 7Zx, 82x, 85x, 86x, 87x, 8Bx, 8Cx, 8Dx, 8Zx, 92x, 95x, 96x, 97x, 98x, 99x, 9Cx, 9Ex, 9Gx, 9Hx, 9Jx, 9Kx, 9Lx, 9Mx, 9Nx, 9Px, 9Rx, AAx, ABx, AVx, AWx, AXx, AYx, AZx, B2x, B3x, B4x, B5x, B6x, BBx, BGx, BHx, BJx, BSx, BTx, C4x, C5x, C6x, C7x, C9x, CAx, DKx, EZx, JDx, JEx, JWx, JYx, JZx, K6x, K7x, K8x, K9x, KUx, KVx, KWx, KYx, KZx, L2x, L7x, LBx, LCx, LDx, LEx, LHx, LJx, LKx, LLx, LPx, LRx, LSx, LTx, LXx, LZx, M5x, M7x, M8x, M9x, N2x, N3x, N4x, N6x, N7x, NEx, NFx, NGx, NHx, NJx, NKx, NLx, NWx, NYx, QUx, QVx, QWx, QYx, QZx, R2x • 3357-CTO, D4x, D6x • 3626-CTO, 17x, 18x, 19x, F4x, FEx, FFx, FJx, FKx, G2x, G3x, G4x, G5x, G9x, GAx, GBx, GTx, HEx, HWx, HXx, Hyx, QFx, R4x, R8x, R9x • 3680-CTO, HSx, P2x, P3x, P4x, P7x, PEx, Q6x • 3712-CTO • 4492-CTO • 5129-CTO, 75x, R1x • 5143-CTO, 2Dx, 2Ex, 2Fx, 2Gx, 2Mx, 2Nx, 2Px, 2Rx, 2Wx, 2Yx, 2Zx, 32x, 37x, 38x, 39x, 3Ax, 3Zx, 42x, 43x, 4Gx • 5385-CTO, D2x, D3x, D6x • 5397-CTO, F2x, F3x, F6x, F8x, FCx, FHx, FJx, FWx, FXx, FYx, FZx • 5413-CTO, L3x, L5x, L9x • 5442-CTO • 5446-CTO	45N7231	*
13	SATA hard disk drive, 500 GB, 5,400 rpm • 7454-CTO, G3x, GEx • 7455-CTO, 4Ex, 8Zx, F6x, FSx, FWx, FYx, PBx, PCx, PFx, PGx, PHx, PJx, N2x • 7457-CTO, 54x, 58x • 7458-CTO, 2Dx, 2Mx, 6Ex, 6Kx, FXx, G4x, G6x • 7459-CTO • 2023-CTO • 2024-CTO • 7462-CTO • 7465-CTO • 7466-CTO, 48x, 4Cx, 4Ex, 4Yx, F2x, F4x, F5x, F6x, FQx, FSx, FTx • 7469-CTO, 6Lx, 6Qx, 6Ux, 6Yx, 8Qx • 7470-CTO • 2046-CTO • 2047-CTO • 3249-CTO • 3323-CTO • 3357-CTO	45N7211	*

Downloaded from LpManual.com Manuals

Table 37. Parts list—Overall (continued)

No.	FRU	FRU no.	CRU ID
	• 3626-CTO, QGx, QTx • 3680-CTO • 3712-CTO • 4492-CTO • 5129-CTO • 5143-CTO • 5385-CTO • 5397-CTO • 5413-CTO • 5442-CTO • 5446-CTO		
13	SATA hard disk drive, 500 GB, 5,400 rpm • 7454-CTO, G3x, GEx • 7455-CTO, 4Ex, 8Zx, F6x, FSx, FWx, FYx, PBx, PCx, PFx, PGx, PHx, PJx, N2x • 7457-CTO, 54x, 58x • 7458-CTO, 2Dx, 2Mx, 6Ex, 6Kx, FXx, G4x, G6x • 7459-CTO • 2023-CTO • 2024-CTO • 7462-CTO • 7465-CTO • 7466-CTO, 48x, 4Cx, 4Ex, 4Yx, F2x, F4x, F5x, F6x, FQx, FSx, FTx • 7469-CTO, 6Lx, 6Qx, 6Ux, 6Yx, 8Qx • 7470-CTO • 2046-CTO • 2047-CTO • 3249-CTO • 3323-CTO • 3357-CTO • 3626-CTO, QGx, QTx • 3680-CTO • 3712-CTO • 4492-CTO • 5129-CTO • 5143-CTO • 5385-CTO • 5397-CTO • 5413-CTO • 5442-CTO • 5446-CTO	45N7221	*
13	SATA hard disk drive, 500 GB, 5,400 rpm • 3249-CTO • 3323-CTO • 3357-CTO • 3626-CTO, QGx, QTx • 3680-CTO • 3712-CTO • 4492-CTO • 5129-CTO • 5143-CTO • 5385-CTO • 5397-CTO • 5413-CTO • 5442-CTO • 5446-CTO	45N7233	*

Downloaded from LpManual.com Manuals

Table 37. Parts list—Overall (continued)

No.	FRU	FRU no.	CRU ID
13	SATA hard disk drive, 100 GB, 7,200 rpm **OP** • 7454-CTO, 2Px, 93x • 7455-CTO, 3Fx, 3Rx • 7457-CTO • 7458-CTO, 7Hx • 7459-CTO • 2023-CTO • 2024-CTO • 7462-CTO • 7465-CTO • 7466-CTO, 3Lx, 3Mx • 7469-CTO • 7470-CTO • 2046-CTO • 2047-CTO	42T1485	*
13	SATA hard disk drive, 100 GB, 7,200 rpm • 7454-CTO, 2Px, 93x • 7455-CTO, 3Fx, 3Rx • 7457-CTO • 7458-CTO, 7Hx • 7459-CTO • 2023-CTO • 2024-CTO • 7462-CTO • 7465-CTO • 7466-CTO, 3Lx, 3Mx • 7469-CTO • 7470-CTO • 2046-CTO • 2047-CTO	39T2799	*
13	SATA hard disk drive, 160 GB, 7,200 rpm **OP** • 7454-CTO, 2Kx, 2Mx, 2Sx, 2Zx, 34x, 36x, 38x, 3Sx, 3Vx, 3Wx, 3Xx, 96x • 7455-CTO, 3Ex, 3Qx, 42x, 43x, 85x, 86x, 8Cx, DXx • 7457-CTO, 43x • 7458-CTO, 22x, 27x, 29x, 2Sx, 5Cx, 5Ex, 5Fx, 5Hx, 5Mx, 64x, 67x, 68x, 6Ax, 6Xx, 7Bx, 7Cx, 7Dx, 7Ex, 7Kx, 7Rx, 83x, 88x, 89x, 8Fx, 8Lx, 8Mx, 8Px, F3x, F5x, F8x, FDx, FQx, M2x • 7459-CTO, 64x, 65x, 6Ax, 6Cx, 6Rx, 6Sx, 6Zx • 2023-CTO • 2024-CTO • 7462-CTO • 7465-CTO • 7466-CTO, 3Gx, 3Jx, 3Kx, 3Nx, 43x, 45x, 9Ax • 7469-CTO, 5Wx, 5Yx, 6Hx, 74x, 76x, 79x, 7Fx, 7Hx, 7Jx, 7Tx, 7Zx, 83x • 7470-CTO, 6Px, 72x • 2046-CTO • 2047-CTO	42T1461	*

Downloaded from LpManual.com Manuals

Table 37. Parts list—Overall (continued)

No.	FRU	FRU no.	CRU ID
13	SATA hard disk drive, 160 GB , 7,200 rpm • 7454-CTO, 2Kx, 2Mx, 2Sx, 2Zx, 34x, 36x, 38x, 3Sx, 3Vx, 3Wx, 3Xx, 96x • 7455-CTO, 3Ex, 3Qx, 42x, 43x, 85x, 86x, 8Cx, DXx • 7457-CTO, 43x • 7458-CTO, 22x, 27x, 29x, 2Sx, 5Cx, 5Ex, 5Fx, 5Hx, 5Mx, 64x, 67x, 68x, 6Ax, 6Xx, 7Bx, 7Cx, 7Dx, 7Ex, 7Kx, 7Rx, 83x, 88x, 89x, 8Fx, 8Lx, 8Mx, 8Px, F3x, F5x, F8x, FDx, FQx, M2x • 7459-CTO, 64x, 65x, 6Ax, 6Cx, 6Rx, 6Sx, 6Zx • 2023-CTO • 2024-CTO • 7462-CTO • 7465-CTO • 7466-CTO, 3Gx, 3Jx, 3Kx, 3Nx, 43x, 45x, 9Ax • 7469-CTO, 5Wx, 5Yx, 6Hx, 74x, 76x, 79x, 7Fx, 7Hx, 7Jx, 7Tx, 7Zx, 83x • 7470-CTO, 6Px, 72x • 2046-CTO • 2047-CTO	42T1439	*
13	SATA hard disk drive, 160 GB, 7,200 rpm • 7454-CTO, 2Kx, 2Mx, 2Sx, 2Zx, 34x, 36x, 38x, 3Sx, 3Vx, 3Wx, 3Xx, 96x • 7455-CTO, 3Ex, 3Qx, 42x, 43x, 85x, 86x, 8Cx, DXx • 7457-CTO, 43x • 7458-CTO, 22x, 27x, 29x, 2Sx, 5Cx, 5Ex, 5Fx, 5Hx, 5Mx, 64x, 67x, 68x, 6Ax, 6Xx, 7Bx, 7Cx, 7Dx, 7Ex, 7Kx, 7Rx, 83x, 88x, 89x, 8Fx, 8Lx, 8Mx, 8Px, F3x, F5x, F8x, FDx, FQx, M2x • 7459-CTO, 64x, 65x, 6Ax, 6Cx, 6Rx, 6Sx, 6Zx • 2023-CTO • 2024-CTO • 7462-CTO • 7465-CTO • 7466-CTO, 3Gx, 3Jx, 3Kx, 3Nx, 43x, 45x, 9Ax • 7469-CTO, 5Wx, 5Yx, 6Hx, 74x, 76x, 79x, 7Fx, 7Hx, 7Jx, 7Tx, 7Zx, 83x • 7470-CTO, 6Px, 72x • 2046-CTO • 2047-CTO	42T1465	*
13	SATA hard disk drive, 160 GB, 7,200 rpm • 7454-CTO, 2Kx, 2Mx, 2Sx, 2Zx, 34x, 36x, 38x, 3Sx, 3Vx, 3Wx, 3Xx, 96x • 7455-CTO, 3Ex, 3Qx, 42x, 43x, 85x, 86x, 8Cx, DXx • 7457-CTO, 43x • 7458-CTO, 22x, 27x, 29x, 2Sx, 5Cx, 5Ex, 5Fx, 5Hx, 5Mx, 64x, 67x, 68x, 6Ax, 6Xx, 7Bx, 7Cx, 7Dx, 7Ex, 7Kx, 7Rx, 83x, 88x, 89x, 8Fx, 8Lx, 8Mx, 8Px, F3x, F5x, F8x, FDx, FQx, M2x • 7459-CTO, 64x, 65x, 6Ax, 6Cx, 6Rx, 6Sx, 6Zx • 2023-CTO • 2024-CTO • 7462-CTO • 7465-CTO • 7466-CTO, 3Gx, 3Jx, 3Kx, 3Nx, 43x, 45x, 9Ax • 7469-CTO, 5Wx, 5Yx, 6Hx, 74x, 76x, 79x, 7Fx, 7Hx, 7Jx, 7Tx, 7Zx, 83x • 7470-CTO, 6Px, 72x • 2046-CTO • 2047-CTO	45N7261	*

Downloaded from LpManual.com Manuals

Table 37. Parts list—Overall (continued)

No.	FRU	FRU no.	CRU ID
13	SATA hard disk drive, 200 GB, FDE, 7,200 rpm OP • 7454-CTO, 22x, 27x • 7455-CTO, 32x • 7457-CTO, 42x, 46x • 7458-CTO, 4Yx, 5Nx, 5Sx, 86x • 7459-CTO, 6Ex • 2023-CTO • 2024-CTO • 7462-CTO • 7465-CTO • 7466-CTO • 7469-CTO, 5Zx, 7Rx • 7470-CTO • 2046-CTO • 2047-CTO	42T1463	*
13	SATA hard disk drive, 200 GB, FDE, 7,200 rpm • 7454-CTO, 22x, 27x • 7455-CTO, 32x • 7457-CTO, 42x, 46x • 7458-CTO, 4Yx, 5Nx, 5Sx, 86x • 7459-CTO, 6Ex • 2023-CTO • 2024-CTO • 7462-CTO • 7465-CTO • 7466-CTO • 7469-CTO, 5Zx, 7Rx • 7470-CTO • 2046-CTO • 2047-CTO	42T1561	*
13	SATA hard disk drive, 250 GB, FDE, 7,200 rpm • 7454-CTO • 7455-CTO • 7457-CTO • 7458-CTO, FFx • 7459-CTO • 2023-CTO • 2024-CTO • 7462-CTO • 7465-CTO • 7466-CTO • 7469-CTO • 7470-CTO • 2046-CTO • 2047-CTO	42T1563	*

Downloaded from LpManual.com Manuals

Table 37. Parts list—Overall (continued)

No.	FRU	FRU no.	CRU ID
13	SATA hard disk drive, 250 GB, FDE, 7,200 rpm • 7454-CTO • 7455-CTO • 7457-CTO • 7458-CTO, FFx • 7459-CTO • 2023-CTO • 2024-CTO • 7462-CTO • 7465-CTO • 7466-CTO • 7469-CTO • 7470-CTO • 2046-CTO • 2047-CTO	42T1573	*
13	SATA hard disk drive, 250 GB, FDE, 7,200 rpm • 7454-CTO • 7455-CTO • 7457-CTO • 7458-CTO, FFx • 7459-CTO • 2023-CTO • 2024-CTO • 7462-CTO • 7465-CTO • 7466-CTO • 7469-CTO • 7470-CTO • 2046-CTO • 2047-CTO	42T1527	*
13	SATA hard disk drive, 250 GB, FDE, 7,200 rpm • 7454-CTO • 7455-CTO • 7457-CTO • 7458-CTO, FFx • 7459-CTO • 2023-CTO • 2024-CTO • 7462-CTO • 7465-CTO • 7466-CTO • 7469-CTO • 7470-CTO • 2046-CTO • 2047-CTO • 3249-CTO • 3323-CTO • 3357-CTO • 3626-CTO • 3680-CTO • 3712-CTO • 4492-CTO • 5129-CTO • 5143-CTO • 5385-CTO • 5397-CTO	45N7279	*

Downloaded from LpManual.com Manuals

Table 37. Parts list—Overall (continued)

No.	FRU	FRU no.	CRU ID
	• 5413-CTO • 5442-CTO • 5446-CTO		
13	SATA hard disk drive, 250 GB, FDE, 7,200 rpm • 7454-CTO • 7455-CTO • 7457-CTO • 7458-CTO, FFx • 7459-CTO • 2023-CTO • 2024-CTO • 7462-CTO • 7465-CTO • 7466-CTO • 7469-CTO • 7470-CTO • 2046-CTO • 2047-CTO • 3249-CTO • 3323-CTO • 3357-CTO • 3626-CTO • 3680-CTO • 3712-CTO • 4492-CTO • 5129-CTO • 5143-CTO • 5385-CTO • 5397-CTO • 5413-CTO • 5442-CTO • 5446-CTO	45N7259	*
13	SATA hard disk drive, 320 GB, 7,200 rpm • 7454-CTO • 7455-CTO, 46x, 4Dx, 4Fx, 4Qx, 4Rx, 4Sx, 87x, 88x, 89x, 8Ax, 8Dx, 8Ex, 8Ux, 8Wx, 8Xx, 8Yx, DLx, DMx, DYx, DZx, FHx, P2x, P5x • 7457-CTO, 57x • 7458-CTO, 2Bx, 2Lx, 2Nx, 2Qx, 2Tx, 2Vx, 65x, 6Bx, 6Cx, 6Dx, 6Tx, 6Wx, FKx, FLx, FUx, FWx, GBx, M3x • 7459-CTO • 2023-CTO • 2024-CTO • 7462-CTO • 7465-CTO • 7466-CTO, 44x, 49x, 4Dx, 4Fx, F3x, FCx, FDx, FEx • 7469-CTO, 6Jx, 6Px, 6Xx, 89x, 8Gx, 8Hx, 95x • 7470-CTO • 2046-CTO • 2047-CTO	42T1559	*

Downloaded from LpManual.com Manuals

Table 37. Parts list—Overall (continued)

No.	FRU	FRU no.	CRU ID
13	SATA hard disk drive, 320 GB, 7,200 rpm • 7454-CTO • 7455-CTO, 46x, 4Dx, 4Fx, 4Qx, 4Rx, 4Sx, 87x, 88x, 89x, 8Ax, 8Dx, 8Ex, 8Ux, 8Wx, 8Xx, 8Yx, DLx, DMx, DYx, DZx, FHx, P2x, P5x • 7457-CTO, 57x • 7458-CTO, 2Bx, 2Lx, 2Nx, 2Qx, 2Tx, 2Vx, 65x, 6Bx, 6Cx, 6Dx, 6Tx, 6Wx, FKx, FLx, FUx, FWx, GBx, M3x • 7459-CTO • 2023-CTO • 2024-CTO • 7462-CTO • 7465-CTO • 7466-CTO, 44x, 49x, 4Dx, 4Fx, F3x, FCx, FDx, FEx • 7469-CTO, 6Jx, 6Px, 6Xx, 89x, 8Gx, 8Hx, 95x • 7470-CTO • 2046-CTO • 2047-CTO	42T1571	*
13	SATA hard disk drive, 320 GB, 7,200 rpm • 7454-CTO • 7455-CTO, 46x, 4Dx, 4Fx, 4Qx, 4Rx, 4Sx, 87x, 88x, 89x, 8Ax, 8Dx, 8Ex, 8Ux, 8Wx, 8Xx, 8Yx, DLx, DMx, DYx, DZx, FHx, P2x, P5x • 7457-CTO, 57x • 7458-CTO, 2Bx, 2Lx, 2Nx, 2Qx, 2Tx, 2Vx, 65x, 6Bx, 6Cx, 6Dx, 6Tx, 6Wx, FKx, FLx, FUx, FWx, GBx, M3x • 7459-CTO • 2023-CTO • 2024-CTO • 7462-CTO • 7465-CTO • 7466-CTO, 44x, 49x, 4Dx, 4Fx, F3x, FCx, FDx, FEx • 7469-CTO, 6Jx, 6Px, 6Xx, 89x, 8Gx, 8Hx, 95x • 7470-CTO • 2046-CTO • 2047-CTO	42T1525	*
13	SATA hard disk drive, 320 GB, 7,200 rpm • 7454-CTO • 7455-CTO, 46x, 4Dx, 4Fx, 4Qx, 4Rx, 4Sx, 87x, 88x, 89x, 8Ax, 8Dx, 8Ex, 8Ux, 8Wx, 8Xx, 8Yx, DLx, DMx, DYx, DZx, FHx, P2x, P5x • 7457-CTO, 57x • 7458-CTO, 2Bx, 2Lx, 2Nx, 2Qx, 2Tx, 2Vx, 65x, 6Bx, 6Cx, 6Dx, 6Tx, 6Wx, FKx, FLx, FUx, FWx, GBx, M3x • 7459-CTO • 2023-CTO • 2024-CTO • 7462-CTO • 7465-CTO • 7466-CTO, 44x, 49x, 4Dx, 4Fx, F3x, FCx, FDx, FEx • 7469-CTO, 6Jx, 6Px, 6Xx, 89x, 8Gx, 8Hx, 95x • 7470-CTO • 2046-CTO • 2047-CTO • 3249-CTO, 2Fx, 2Gx, 2Hx, 2Mx, 2Nx, 2Px, 2Tx, 2Ux, 2Vx, 3Xx, C3x, CHx, CPx, CRx, CSx, CTx, CUx, DCx, EPx, ESx, JSx, JTx, JUx, MRx, MSx, Q9x, QAx • 3323-CTO, 12x, 1Mx, 1Nx, 1Tx, 3Qx, 58x, 59x, 5Ax, 8Gx, 8Jx, 8Kx, 8Lx, 8Nx, 8Px, 8Rx, 8Sx, 8Tx, 8Ux, 8Vx, 8Wx, 8Xx, 8Yx, 9Dx, 9Fx, A2x, A3x, A4x, A5x, A6x, A7x, ADx, AEx, AFx, AGx, AHx, AMx, ANx, APx, ARx, ASx, ATx, AUx, BCx, BDx, BEx, BFx, BMx, BNx,	42N7255	*

Downloaded from LpManual.com Manuals

Table 37. Parts list—Overall (continued)

No.	FRU	FRU no.	CRU ID
	BWx, BXx, BYx, BZx, CWx, CYx, D9x, DAx, DNx, DSx, DTx, DUx, DVx, DWx, DXx, DYx, E2x, E3x, E4x, E5x, E6x, E9x, EAx, EBx, EFx, EHx, EKx, ELx, EMx, ETx, EVx, EYx, JBx, JCx, KAx, KCx, KDx, KEx, KFx, KGx, KHx, KJx, KLx, KMx, KNx, KPx, KRx, KSx, KTx, N8x, N9x, NAx, NBx, NCx, NDx, PMx, PNx, PPx, PRx, PSx, PTx, RAx, RBx, RCx, RHx, RJx, RKx, RLx, RNx, RPx, RRx, RSx • 3357-CTO, D7x, LMx • 3626-CTO, 11x, 14x, 15x, 16x, F2x, F3x, F5x, F7x, F9x, FAx, FPx, FRx, FSx, FUx, FVx, FWx, FZx, GEx, GFx, GHx, GUx, GVx, GWx, H8x, H9x, H9x, HAx, HBx, HKx, HLx, HUx, HVx, PVx, PWx, Q2x, QJx, QKx, R3x, R6x, R7x, RMx, RZx • 3680-CTO, 11x, 14x, 4Qx, F7x, F9x, FAx, H8x, H9x, HAx, HBx, HQx, HRx, PBx, PKx, PLx, Q7x • 3712-CTO • 4492-CTO • 5129-CTO, 73x, R1x • 5143-CTO, 28x, 44x, 45x, 46x, 47x, 48x, 49x, 4Ax, 4Bx, 4Cx, 4Dx, 4Ex • 5385-CTO, D4x • 5397-CTO, FEx, FFx, FNx, FPx, FRx, G6x, G7x, GAx • 5413-CTO, FEx, FFx • 5442-CTO • 5446-CTO		
13	SATA hard disk drive, 320 GB, 7,200 rpm • 3249-CTO, 2Fx, 2Gx, 2Hx, 2Mx, 2Nx, 2Px, 2Tx, 2Ux, 2Vx, 3Xx, C3x, CHx, CPx, CRx, CSx, CTx, CUx, DCx, EPx, ESx, JSx, JTx, JUx, MRx, MSx, Q9x, QAx • 3323-CTO, 12x, 1Mx, 1Nx, 1Tx, 3Qx, 58x, 59x, 5Ax, 8Gx, 8Jx, 8Kx, 8Lx, 8Nx, 8Px, 8Rx, 8Sx, 8Tx, 8Ux, 8Vx, 8Wx, 8Xx, 8Yx, 9Dx, 9Fx, A2x, A3x, A4x, A5x, A6x, A7x, ADx, AEx, AFx, AGx, AHx, AMx, ANx, APx, ARx, ASx, ATx, AUx, BCx, BDx, BEx, BFx, BMx, BNx, BWx, BXx, BYx, BZx, CWx, CYx, D9x, DAx, DNx, DSx, DTx, DUx, DVx, DWx, DXx, DYx, E2x, E3x, E4x, E5x, E6x, E9x, EAx, EBx, EFx, EHx, EKx, ELx, EMx, ETx, EVx, EYx, JBx, JCx, KAx, KCx, KDx, KEx, KFx, KGx, KHx, KJx, KLx, KMx, KNx, KPx, KRx, KSx, KTx, N8x, N9x, NAx, NBx, NCx, NDx, PMx, PNx, PPx, PRx, PSx, PTx, RAx, RBx, RCx, RHx, RJx, RKx, RLx, RNx, RPx, RRx, RSx • 3357-CTO, D7x, LMx • 3626-CTO, 11x, 14x, 15x, 16x, F2x, F3x, F5x, F7x, F9x, FAx, FPx, FRx, FSx, FUx, FVx, FWx, FZx, GEx, GFx, GHx, GUx, GVx, GWx, H8x, H9x, H9x, HAx, HBx, HKx, HLx, HUx, HVx, PVx, PWx, Q2x, QJ+ QKx, R3x, R6x, R7x, RMx, RZx • 3680-CTO, 11x, 14x, 4Q+ F7x, F9x, FAx, H8x, H9x, HAx, HBx, HQx, HRx, PBx, PKx, PLx, Q7x • 3712-CTO • 4492-CTO • 5129-CTO, 72x, 73x, 76x, 77x, 78x, R1x • 5143-CTO, 28x, 44x, 45x, 46x, 47x, 48x, 49x, 4Ax, 4Bx, 4Cx, 4Dx, 4Ex, 4Kx • 5385-CTO, D4x, D7x, D8x, D9x • 5397-CTO, FEx, FFx, FNx, FPx, FRx, G6x, G7x, GAx, GCx, GEx, GGx • 5413-CTO, FEx, FFx, L6x, L7x, LBx • 5442-CTO • 5446-CTO	42N7275	*

Downloaded from LpManual.com Manuals

Table 37. Parts list—Overall (continued)

No.	FRU	FRU no.	CRU ID
13	SATA hard disk drive, 500 GB, 7,200 rpm • 7454-CTO • 7455-CTO, 4Gx, FXx, P9x • 7457-CTO • 7458-CTO, 2Cx, 2Ex, 2Px, 6Jx, 6Lx, 6Ux, 6Vx, 6Yx, G5x, GCx, GDx • 7459-CTO • 2023-CTO • 2024-CTO • 7462-CTO • 7465-CTO • 7466-CTO, 4Ax, 4Zx, 52x • 7469-CTO, 6Mx, 6Vx, 96x, 9Gx • 7470-CTO • 2046-CTO • 2047-CTO • 3249-CTO, 19x, 1Ax, 22x, 25x, 26x, 28x, 2Ax, 2Dx, 2Lx, 32x, 3Rx, C8x, CJx, CKx, CLx, CMx, CNx, DDx, DEx, DFx, DGx, DHx, DJx, ENx, JPx, MTx, QCx, QDx • 3323-CTO, 1Lx, 1Px, 1Rx, 1Sx, 1Ux, 1Vx, 1Wx, 1Xx, 1Yx, 43x, 45x, 46x, 48x, 4Ax, 4Cx, 4Hx, 4Jx, 4Px, 4Rx, 4Sx, 4Vx, 4Wx, 52x, 83x, 84x, 88x, 89x, 8Ex, 8Fx, 93x, 94x, 9Ax, 9Bx, 9Sx, 9Tx, 9Ux, 9Vx, 9Wx, 9Yx, 9Zx, A8x, A9x, ACx, AJx, AKx, ALx, B7x, B8x, BKx, BLx, BPx, BRx, CVx, CXx, CZx, D8x, DLx, DMx, DPx, DRx, E7x, E8x, EEx, EGx, EJx, EUx, EWx, EXx, L3x, L4x, L5x, L8x, LAx, LGx, LUx, LVx, LWx, LYx, M2x, M6x, MAx, N5x, NXx, NZx, PUx, QEx, Qxx • 3357-CTO, D2x, D3x, D5x • 3626-CTO,1Kx, G6x, G7x, GCx, GDx, GJx, H8x, Q3x, Q4x, Q5x, QHx, R6x • 3680-CTO, P5x • 3712-CTO • 4492-CTO • 5129-CTO • 5143-CTO, 22x, 24x, 26x, 3Ux, 3Wx • 5385-CTO • 5397-CTO, G2x, G4x, G8x, G9x • 5413-CTO • 5442-CTO • 5446-CTO	45N7257	*
13	SATA hard disk drive, 500 GB, 7,200 rpm • 3249-CTO, 19x, 1Ax, 22x, 25x, 26x, 28x, 2Ax, 2Dx, 2Lx, 32x, 3Rx, C8x, CJx, CKx, CLx, CMx, CNx, DDx, DEx, DFx, DGx, DHx, DJx, ENx, JPx, MTx, QCx, QDx • 3323-CTO, 1Lx, 1Px, 1Rx, 1Sx, 1Ux, 1Vx, 1Wx, 1Xx, 1Yx, 43x, 45x, 46x, 48x, 4Ax, 4Cx, 4Hx, 4Jx, 4Px, 4Rx, 4Sx, 4Vx, 4Wx, 52x, 83x, 84x, 88x, 89x, 8Ex, 8Fx, 93x, 94x, 9Ax, 9Bx, 9Sx, 9Tx, 9Ux, 9Vx, 9Wx, 9Yx, 9Zx, A8x, A9x, ACx, AJx, AKx, ALx, B7x, B8x, BKx, BLx, BPx, BRx, CVx, CXx, CZx, D8x, DLx, DMx, DPx, DRx, E7x, E8x, EEx, EGx, EJx, EUx, EWx, EXx, L3x, L4x, L5x, L8x, LAx, LGx, LUx, LVx, LWx, LYx, M2x, M6x, MAx, N5x, NXx, NZx, PUx, QEx, Qxx • 3357-CTO, D2x, D3x, D5x • 3626-CTO,1Kx, G6x, G7x, GCx, GDx, GJx, H8x, Q3x, Q4x, Q5x, QHx, R6x • 3680-CTO, P5x • 3712-CTO • 4492-CTO • 5129-CTO • 5143-CTO, 22x, 24x, 26x, 3Ux, 3Wx • 5385-CTO • 5397-CTO, G2x, G4x, G8x, G9x • 5413-CTO • 5442-CTO • 5446-CTO	45N7277	*

Downloaded from LpManual.com Manuals

Table 37. Parts list—Overall (continued)

No.	FRU	FRU no.	CRU ID
14	Hard disk drive cover assembly	44C9553	*
15	1.8-inch - 2.5-inch storage converter • 7454-CTO, 24x, 2Gx, 2Jx, 3Nx, 3Qx, 9Gx, 9Jx • 7455-CTO, 34x, 38x, 3Bx, 3Gx, 3Ux, 4Ax, FJx • 7457-CTO, 4Cx, 4Ex, 4Fx • 7458-CTO, 2Ax, 58x, 6Mx, 6Nx, 6Px, 73x, 76x, 77x, 8Rx, 8Sx, 8Tx, 8Wx, FCx, GFx • 7459-CTO, 66x, 6Kx, 6Mx, 6Nx, 72x, E3x • 2023-CTO • 2024-CTO • 7462-CTO, 4Mx, 4Nx, 4Px, 4Zx • 7465-CTO, 2Hx, 2Jx, 2Kx, 2Yx, 3Mx, D2x, D3x • 7466-CTO, 3Dx, 3Ex, 3Fx, 93x, 94x • 7469-CTO, 5Lx, 5Mx, 5Px, 5Sx, 6Fx, 6Nx, 6Rx, 6Wx, 6Zx, 72x, 73x, 75x, 7Ex, 7Gx, 7Kx, 7Mx, 7Sx, 7Ux, 84x, 85x, 86x, 87x, 8Bx, 8Jx, GAx • 7470-CTO, 6Ex, 6Fx, 6Jx, 6Mx, 6Ux • • 2046-CTO • 2047-CTO • 3249-CTO • 3323-CTO, 4Gx, 4Wx, 8Gx, KWx • 3357-CTO • 3626-CTO, F7x, FUx, FYx, G9x, GYx, GZx, R3x • 3680-CTO, P6x, PCx, PGx • 3712-CTO • 4492-CTO • 5129-CTO • 5143-CTO, 23x, 25x, 27x, 3Vx, 3Yx • 5385-CTO • 5397-CTO, F7x, FBx, FKx, G3x, G5x • 5413-CTO • 5442-CTO • 5446-CTO	42W8019	*
16	SATA solid-state drive, 64 GB OP • 7454-CTO, 24x, 2Gx, 3Nx • 7455-CTO, 34x, 38x • 7457-CTO, 4Cx, 4Ex • 7458-CTO, 73x, 76x • 7459-CTO, 6Kx, 6Mx • 2023-CTO • 2024-CTO • 7462-CTO, 4Mx, 4Nx, 4Px, 4Zx • 7465-CTO, 2Hx, 2Jx, 2Kx, 2Yx, 3Mx, D2x, D3x • 7466-CTO, 3Dx, 3Ex, 3Fx • 7469-CTO, 5Lx, 5Mx, 5Px, 6Fx, 73x, 7Ex, 7Sx, 84x, 8Bx • 7470-CTO, 6Ex, 6Fx, 6Jx • 2046-CTO • 2047-CTO	42T1898	*

Downloaded from LpManual.com Manuals

Table 37. Parts list—Overall (continued)

No.	FRU	FRU no.	CRU ID
16	SATA solid state drive, 64 GB • 7454-CTO, 24x, 2Gx, 3Nx • 7455-CTO, 34x, 38x • 7457-CTO, 4Cx, 4Ex • 7458-CTO, 73x, 76x • 7459-CTO, 6Kx, 6Mx • 2023-CTO • 2024-CTO • 7462-CTO, 4Mx, 4Nx, 4Px, 4Zx • 7465-CTO, 2Hx, 2Jx, 2Kx, 2Yx, 3Mx, D2x, D3x • 7466-CTO, 3Dx, 3Ex, 3Fx • 7469-CTO, 5Lx, 5Mx, 5Px, 6Fx, 73x, 7Ex, 7Sx, 84x, 8Bx • 7470-CTO, 6Ex, 6Fx, 6Jx • 2046-CTO • 2047-CTO	41W0520	*
16	SATA solid state drive, 64 GB • 7454-CTO, 24x, 2Gx, 3Nx • 7455-CTO, 34x, 38x • 7457-CTO, 4Cx, 4Ex • 7458-CTO, 73x, 76x • 7459-CTO, 6Kx, 6Mx • 2023-CTO • 2024-CTO • 7462-CTO, 4Mx, 4Nx, 4Px, 4Zx • 7465-CTO, 2Hx, 2Jx, 2Kx, 2Yx, 3Mx, D2x, D3x • 7466-CTO, 3Dx, 3Ex, 3Fx • 7469-CTO, 5Lx, 5Mx, 5Px, 6Fx, 73x, 7Ex, 7Sx, 84x, 8Bx • 7470-CTO, 6Ex, 6Fx, 6Jx • 2046-CTO • 2047-CTO	45N8201	*
16	SATA solid state drive, 80 GB • 7454-CTO, 9Jx • 7455-CTO • 7457-CTO • 7458-CTO • 7459-CTO, 66x, E3x • 2023-CTO • 2024-CTO • 7462-CTO • 7465-CTO • 7466-CTO, 93x, 94x • 7469-CTO, 72x, 7Gx, 7Kx, 7Mx, 7Ux • 7470-CTO, 6Mx, 6Ux • 2046-CTO • 2047-CTO	41W0516	*

Downloaded from LpManual.com Manuals

Table 37. Parts list—Overall (continued)

No.	FRU	FRU no.	CRU ID
16	SATA solid state drive, 80 GB • 7454-CTO, 9Jx • 7455-CTO • 7457-CTO • 7458-CTO • 7459-CTO, 66x, E3x • 2023-CTO • 2024-CTO • 7462-CTO • 7465-CTO • 7466-CTO, 93x, 94x • 7469-CTO, 72x, 7Gx, 7Kx, 7Mx, 7Ux • 7470-CTO, 6Mx, 6Ux • 2046-CTO • 2047-CTO • 3249-CTO • 3323-CTO • 3357-CTO • 3626-CTO, GZx, HHx, R4x, R5x • 3680-CTO, HNx, PCx • 3712-CTO • 4492-CTO • 5129-CTO • 5143-CTO • 5385-CTO • 5397-CTO, FBx • 5413-CTO • 5442-CTO • 5446-CTO	41W0524	*
16	SATA solid state drive, 128 GB • 7454-CTO, 2Jx, 9Gx • 7455-CTO, 3Bx, 3Gx, 3Ux, FJx • 7457-CTO, 4Fx • 7458-CTO, 2Ax, 58x, 6Mx, 6Nx, 6Px, 77x, 8Rx, 8Sx, 8Tx, 8Wx, FCx, GFx • 7459-CTO, 6Nx, 72x • 2023-CTO • 2024-CTO • 7462-CTO • 7465-CTO • 7466-CTO • 7469-CTO, 6Nx, 6Rx, 6Wx, 6Zx, 75x, 85x, 86x, 87x, 8Jx, GAx • 7470-CTO • 2046-CTO • 2047-CTO	41W0519	*

Downloaded from LpManual.com Manuals

Table 37. Parts list—Overall (continued)

No.	FRU	FRU no.	CRU ID
16	SATA solid state drive, 128 GB • 7454-CTO, 2Jx, 9Gx • 7455-CTO, 3Bx, 3Gx, 3Ux, FJx • 7457-CTO, 4Fx • 7458-CTO, 2Ax, 58x, 6Mx, 6Nx, 6Px, 77x, 8Rx, 8Sx, 8Tx, 8Wx, FCx, GFx • 7459-CTO, 6Nx, 72x • 2023-CTO • 2024-CTO • 7462-CTO • 7465-CTO • 7466-CTO • 7469-CTO, 6Nx, 6Rx, 6Wx, 6Zx, 75x, 85x, 86x, 87x, 8Jx, GAx • 7470-CTO • 2046-CTO • 2047-CTO • 3249-CTO • 3323-CTO, 4Dx, 4Tx, 8Ax, DZx, L6x, MBx, RDx, REx, RFx, RGx • 3357-CTO • 3626-CTO, F6x, FTx, FXx, G8x, GYx, H7x, HCx, HFx, HGx, HJx, PXx, QSx, RTx, RVx • 3680-CTO, HCx, HPx, HTx, P6x, PGx • 3712-CTO • 4492-CTO • 5129-CTO • 5143-CTO, 23x, 25x, 27x, 3Vx, 3Yx, 4Lx, 4Px • 5385-CTO • 5397-CTO, F7x, FKx, G3x, G5x, GDx • 5413-CTO • 5442-CTO • 5446-CTO	45N8203	*
16	SATA solid state drive, 128 GB • 7454-CTO, 2Jx, 9Gx • 7455-CTO, 3Bx, 3Gx, 3Ux, FJx • 7457-CTO, 4Fx • 7458-CTO, 2Ax, 58x, 6Mx, 6Nx, 6Px, 77x, 8Rx, 8Sx, 8Tx, 8Wx, FCx, GFx • 7459-CTO, 6Nx, 72x • 2023-CTO • 2024-CTO • 7462-CTO • 7465-CTO • 7466-CTO • 7469-CTO, 6Nx, 6Rx, 6Wx, 6Zx, 75x, 85x, 86x, 87x, 8Jx, GAx • 7470-CTO • 2046-CTO • 2047-CTO • 3249-CTO • 3323-CTO, 4Dx, 4Tx, 8Ax, DZx, L6x, MBx, RDx, REx, RFx, RGx • 3357-CTO • 3626-CTO, F6x, FTx, FXx, G8x, GYx, H7x, HCx, HFx, HGx, HJx, PXx, QSx, RTx, RVx • 3680-CTO, HCx, HPx, HTx, P6x, PGx • 3712-CTO • 4492-CTO • 5129-CTO • 5143-CTO, 23x, 25x, 27x, 3Vx, 3Yx, 4Lx, 4Px • 5385-CTO • 5397-CTO, F7x, FKx, G3x, G5x, GDx • 5413-CTO	45N7953	*

Downloaded from LpManual.com Manuals

Table 37. Parts list—Overall (continued)

No.	FRU	FRU no.	CRU ID
	• 5442-CTO • 5446-CTO		
16	SATA solid state drive, FDE, 128 GB, • 7454-CTO • 7455-CTO • 7457-CTO • 7458-CTO • 7459-CTO • 2023-CTO • 2024-CTO • 7462-CTO • 7465-CTO • 7466-CTO • 7469-CTO • 7470-CTO • 2046-CTO • 2047-CTO	45N8205	*
16	SATA solid state drive, FDE, 128 GB • 7454-CTO • 7455-CTO • 7457-CTO • 7458-CTO • 7459-CTO • 2023-CTO • 2024-CTO • 7462-CTO • 7465-CTO • 7466-CTO • 7469-CTO • 7470-CTO • 2046-CTO • 2047-CTO	45N7955	*
16	SATA solid state drive, 160 GB • 7454-CTO • 7455-CTO • 7457-CTO • 7458-CTO • 7459-CTO • 2023-CTO • 2024-CTO • 7462-CTO • 7465-CTO • 7466-CTO • 7469-CTO • 7470-CTO • 2046-CTO • 2047-CTO	41W0522	*

Downloaded from LpManual.com Manuals

Table 37. Parts list—Overall (continued)

No.	FRU	FRU no.	CRU ID
16	SATA solid state drive, 160 GB • 3249-CTO • 3323-CTO, DBx • 3357-CTO • 3626-CTO, PYx • 3680-CTO • 3712-CTO • 4492-CTO • 5129-CTO • 5143-CTO, 4Nx • 5385-CTO • 5397-CTO • 5413-CTO • 5442-CTO • 5446-CTO	45N7977	*
16	SATA solid state drive, FDE, 256 GB • 7454-CTO, 3Qx • 7455-CTO, 4Ax • 7457-CTO • 7458-CTO • 7459-CTO • 2023-CTO • 2024-CTO • 7462-CTO • 7465-CTO, 3Kx • 7466-CTO • 7469-CTO • 7470-CTO • 2046-CTO • 2047-CTO • 3249-CTO • 3323-CTO • 3357-CTO • 3626-CTO • 3680-CTO • 3712-CTO • 4492-CTO • 5129-CTO • 5143-CTO • 5385-CTO • 5397-CTO • 5413-CTO • 5442-CTO • 5446-CTO	45N8207	*

Downloaded from LpManual.com Manuals

Table 37. Parts list—Overall (continued)

No.	FRU	FRU no.	CRU ID
16	SATA solid state drive, FDE, 256 GB • 7454-CTO, 3Qx • 7455-CTO, 4Ax • 7457-CTO • 7458-CTO • 7459-CTO • 2023-CTO • 2024-CTO • 7462-CTO • 7465-CTO, 3Kx • 7466-CTO • 7469-CTO • 7470-CTO • 2046-CTO • 2047-CTO • 3249-CTO • 3323-CTO • 3357-CTO • 3626-CTO • 3680-CTO • 3712-CTO • 4492-CTO • 5129-CTO • 5143-CTO • 5385-CTO • 5397-CTO • 5413-CTO • 5442-CTO • 5446-CTO	45N7959	*
16	SATA solid state drive, 80 GB • 3249-CTO • 3323-CTO • 3357-CTO • 3626-CTO, GZx, HHx, R4x, R5x • 3680-CTO, HNx, PCx • 3712-CTO • 4492-CTO • 5129-CTO • 5143-CTO • 5385-CTO • 5397-CTO, FBx • 5413-CTO • 5442-CTO • 5446-CTO	45N7975	*

Downloaded from LpManual.com Manuals

Table 37. Parts list—Overall (continued)

No.	FRU	FRU no.	CRU ID
17	DVD drive • 7454-CTO • 7455-CTO • 7457-CTO • 7458-CTO • 7459-CTO • 2023-CTO • 2024-CTO • 7462-CTO • 7465-CTO • 7466-CTO • 7469-CTO • 7470-CTO • 2046-CTO • 2047-CTO	42T2541	*
17	DVD drive • 7454-CTO • 7455-CTO • 7457-CTO • 7458-CTO • 7459-CTO • 2023-CTO • 2024-CTO • 7462-CTO • 7465-CTO • 7466-CTO • 7469-CTO • 7470-CTO • 2046-CTO • 2047-CTO	42T2553	*
17	DVD/CD-RW combo drive • 7454-CTO • 7455-CTO, DBx, DFx • 7457-CTO • 7458-CTO, 7Cx • 7459-CTO, 6Ax • 2023-CTO • 2024-CTO • 7462-CTO • 7465-CTO • 7466-CTO • 7469-CTO, 72x, 79x • 7470-CTO • 2046-CTO • 2047-CTO	42T2543	*

Downloaded from LpManual.com Manuals

Table 37. Parts list—Overall (continued)

No.	FRU	FRU no.	CRU ID
17	DVD/CD-RW combo drive • 7454-CTO • 7455-CTO, DBx, DFx • 7457-CTO • 7458-CTO, 7Cx • 7459-CTO, 6Ax • 2023-CTO • 2024-CTO • 7462-CTO • 7465-CTO • 7466-CTO • 7469-CTO, 72x, 79x • 7470-CTO • 2046-CTO • 2047-CTO	42T2555	*
17	DVD-RAM/RW drive • 7454-CTO, 2Kx, 2Mx, 2Rx, 2Sx, 2Zx, 34x, 36x, 3Lx, 3Mx, 3Nx, 3Sx, 3Vx, 3Wx, 3Xx, 96x, 98x, 9Gx, 9Jx • 7455-CTO, 3Sx, 3Tx, 3Xx, 3Yx, 43x, 4Rx, 87x, 88x, 8Ax, 8Dx, 8Ex, 8Px, D7x, D8x, DLx, DMx, DYx, DZx, FHx • 7457-CTO • 7458-CTO, 2Tx, 2Vx, 5Nx, 5Qx, 5Rx, 67x, 6Nx, 7Bx, 7Qx, 85x, 87x, 8Gx, 8Kx, 8Nx, M3x • 7459-CTO, 65x, 6Rx, 6Sx, 6Ux • 2023-CTO • 2024-CTO • 7462-CTO, 46x • 7465-CTO • 7466-CTO, 3Hx, 3Jx, 3Nx, 43x, 44x, 9Yx, 9Zx • 7469-CTO, 5Sx, 5Xx, 6Gx, 77x, 7Bx, 7Ex, 84x, GAx • 7470-CTO, 6Gx, 6Nx • 2046-CTO • 2047-CTO	42T2545	*
17	DVD-RAM/RW drive • 7454-CTO, 2Kx, 2Mx, 2Rx, 2Sx, 2Zx, 34x, 36x, 3Lx, 3Mx, 3Nx, 3Sx, 3Vx, 3Wx, 3Xx, 96x, 98x, 9Gx, 9Jx • 7455-CTO, 3Sx, 3Tx, 3Xx, 3Yx, 43x, 4Rx, 87x, 88x, 8Ax, 8Dx, 8Ex, 8Px, D7x, D8x, DLx, DMx, DYx, DZx, FHx • 7457-CTO • 7458-CTO, 2Tx, 2Vx, 5Nx, 5Qx, 5Rx, 67x, 6Nx, 7Bx, 7Qx, 85x, 87x, 8Gx, 8Kx, 8Nx, M3x • 7459-CTO, 65x, 6Rx, 6Sx, 6Ux • 2023-CTO • 2024-CTO • 7462-CTO, 46x • 7465-CTO • 7466-CTO, 3Hx, 3Jx, 3Nx, 43x, 44x, 9Yx, 9Zx • 7469-CTO, 5Sx, 5Xx, 6Gx, 77x, 7Bx, 7Ex, 84x, GAx • 7470-CTO, 6Gx, 6Nx • 2046-CTO • 2047-CTO	42T2557	*

Downloaded from LpManual.com Manuals

Table 37. Parts list—Overall (continued)

No.	FRU	FRU no.	CRU ID
17	DVD-RAM/RW drive • 7454-CTO, 2Kx, 2Mx, 2Rx, 2Sx, 2Zx, 34x, 36x, 3Lx, 3Mx, 3Nx, 3Sx, 3Vx, 3Wx, 3Xx, 96x, 98x, 9Gx, 9Jx • 7455-CTO, 3Sx, 3Tx, 3Xx, 3Yx, 43x, 4Rx, 87x, 88x, 8Ax, 8Dx, 8Ex, 8Px, D7x, D8x, DLx, DMx, DYx, DZx, FHx • 7457-CTO • 7458-CTO, 2Tx, 2Vx, 5Nx, 5Qx, 5Rx, 67x, 6Nx, 7Bx, 7Qx, 85x, 87x, 8Gx, 8Kx, 8Nx, M3x • 7459-CTO, 65x, 6Rx, 6Sx, 6Ux • 2023-CTO • 2024-CTO • 7462-CTO, 46x • 7465-CTO • 7466-CTO, 3Hx, 3Jx, 3Nx, 43x, 44x, 9Yx, 9Zx • 7469-CTO, 5Sx, 5Xx, 6Gx, 77x, 7Bx, 7Ex, 84x, GAx • 7470-CTO, 6Gx, 6Nx • 2046-CTO • 2047-CTO	42T2551	*
17	DVD-RAM/RW drive • 3249-CTO, 2Fx, 2Gx, 2Hx, 2Px, 2Rx, 2Tx, 2Ux, 2Vx, EPx • 3323-CTO, 1Lx, 1Sx, 1Tx, 8Tx, 8Ux, 8Xx, 8Yx, 9Dx, A2x, AEx, AFx, DTx, DUx, DVx, DWx, DZx, KMx, KNx, KSx, KTx, PMx, RCx, RDx, REx, RFx, RGx, RHx, RJx, RKx, RLx, QEx • 3357-CTO • 3626-CTO, 13x, F4x, F5x, F9x, GMx, Hyx, HZx, R6x • 3680-CTO,4Qx, F9x, HSx, P9x, PBx, Q7x, • 3712-CTO • 4492-CTO • 5129-CTO • 5143-CTO, 46x, 47x, 4Ax, 4Bx • 5385-CTO • 5397-CTO, FEx, GCx, GGx • 5413-CTO, FEx, L7x, LBx • 5442-CTO • 5446-CTO	45N7457	*
17	DVD-RAM/RW drive • 3249-CTO, 2Fx, 2Gx, 2Hx, 2Px, 2Rx, 2Tx, 2Ux, 2Vx, EPx • 3323-CTO, 1Lx, 1Sx, 1Tx, 8Tx, 8Ux, 8Xx, 8Yx, 9Dx, A2x, AEx, AFx, DTx, DUx, DVx, DWx, DZx, KMx, KNx, KSx, KTx, PMx, RCx, RDx, REx, RFx, RGx, RHx, RJx, RKx, RLx, QEx • 3357-CTO • 3626-CTO, 13x, F4x, F5x, F9x, GMx, Hyx, HZx, R6x • 3680-CTO,4Qx, F9x, HSx, P9x, PBx, Q7x, • 3712-CTO • 4492-CTO • 5129-CTO • 5143-CTO, 46x, 47x, 4Ax, 4Bx • 5385-CTO • 5397-CTO, FEx, GCx, GGx • 5413-CTO, FEx, L7x, LBx • 5442-CTO • 5446-CTO	45N7453	*

Downloaded from LpManual.com Manuals

Table 37. Parts list—Overall (continued)

No.	FRU	FRU no.	CRU ID
17	DVD-RAM/RW drive • 3249-CTO, 2Fx, 2Gx, 2Hx, 2Px, 2Rx, 2Tx, 2Ux, 2Vx, EPx • 3323-CTO, 1Lx, 1Sx, 1Tx, 8Tx, 8Ux, 8Xx, 8Yx, 9Dx, A2x, AEx, AFx, DTx, DUx, DVx, DWx, DZx, KMx, KNx, KSx, KTx, PMx, RCx, RDx, REx, RFx, RGx, RHx, RJx, RKx, RLx, QEx • 3357-CTO • 3626-CTO, 13x, F4x, F5x, F9x, GMx, Hyx, HZx, R6x • 3680-CTO,4Qx, F9x, HSx, P9x, PBx, Q7x, • 3712-CTO • 4492-CTO • 5129-CTO • 5143-CTO, 46x, 47x, 4Ax, 4Bx • 5385-CTO • 5397-CTO, FEx, GCx, GGx • 5413-CTO, FEx, L7x, LBx • 5442-CTO • 5446-CTO	45N7451	*
17	DVD-ROM drive	45N7485	*
17	Blu-ray disk drive • 7454-CTO • 7455-CTO • 7457-CTO • 7458-CTO, 6Px • 7459-CTO, 66x, 6Tx, E3x, H2x • 2023-CTO • 2024-CTO • 7462-CTO • 7465-CTO • 7466-CTO • 7469-CTO, 8Qx • 7470-CTO • 2046-CTO • 2047-CTO	42T2559	*
17	Blu-ray disk drive • 3249-CTO • 3323-CTO • 3357-CTO • 3626-CTO • 3680-CTO • 3712-CTO • 4492-CTO • 5129-CTO • 5143-CTO • 5385-CTO • 5397-CTO • 5413-CTO • 5442-CTO • 5446-CTO	45N7459	*

Downloaded from LpManual.com Manuals

Table 37. Parts list—Overall (continued)

No.	FRU	FRU no.	CRU ID
18	ThinkPad X200 UltraBase • 7454-CTO, 2Kx, 2Mx, 2Rx, 2Sx, 2Zx, 34x, 36x, 3Lx, 3Mx, 3Nx, 3Sx, 3Vx, 3Wx, 3Xx, 96x, 98x, 9Gx, 9Jx • 7455-CTO, 3Sx, 3Tx, 3Xx, 3Yx, 43x, 4Rx, 87x, 88x, 8Ax, 8Dx, 8Ex, 8Px, D7x, D8x, DBx, DFx, DLx, DMx, DYx, DZx, FHx • 7457-CTO • 7458-CTO, 2Tx, 2Vx, 5Nx, 5Qx, 5Rx, 67x, 6Nx, 6Px, 7Bx, 7Cx, 7Qx, 85x, 87x, 8Gx, 8Kx, 8Nx, M3x • 7459-CTO, 65x, 66x, 6Ax, 6Rx, 6Sx, 6Tx, 6Ux, E3x, H2x • 2023-CTO • 2024-CTO • 7462-CTO • 7465-CTO • 7466-CTO, 3Fx, 3Gx, 3Jx, 43x, 44x, H2x, H3x, H4x • 7469-CTO, 5Fx, 5Jx, 5Lx, 5Px, 5Vx, 5Wx, 6Gx, 73x, 7Vx, 8Px, GBx • 7470-CTO, 6Ex, 6Jx • 2046-CTO • 2047-CTO • 3249-CTO, 2Fx, 2Gx, 2Hx, 2Px, 2Rx, 2Tx, 2Ux, 2Vx, EPx • 3323-CTO, 1Lx, 1Sx, 1Tx, 8Tx, 8Ux, 8Xx, 8Yx, 9Dx, A2x, AEx, AFx, DTx, DUx, DVx, DWx, DZx, KMx, KNx, KSx, KTx, PMx, RCx, RDx, REx, RFx, RGx, RHx, RJx, RKx, RLx, QEx • 3357-CTO • 3626-CTO, 13x, F4x, F5x, F9x, GMx, Hyx, HZx, R6x • 3680-CTO,4Qx, F9x, HSx, P9x, PBx, Q7x, • 3712-CTO • 4492-CTO • 5129-CTO • 5143-CTO, 46x, 47x, 4Ax, 4Bx • 5385-CTO • 5397-CTO, FEx, GCx, GGx • 5413-CTO, FEx, L7x, LBx • 5442-CTO • 5446-CTO	42X4963	*
19	DIMM door kit	44C9555	*
20	Base cover assembly for 7454	44C9559	N
20	Base cover assembly for 7455	44C9560	N
20	Base cover assembly for 7457	44C9561	N
20	Base cover assembly for 7458	44C9562	N
20	Base cover assembly for 7459	42X5178	N
20	Base cover assembly for 2023	42X5180	N
20	Base cover assembly for 2024	42X5182	N
20	Base cover assembly for 7462	45N3240	N
20	Base cover assembly for 7465	45N3237	N
20	Base cover assembly for 7466	45N3238	N
20	Base cover assembly for 7469	45N3241	N
20	Base cover assembly for 7470	45N3242	N
20	Base cover assembly for 2046	45N3243	N
20	Base cover assembly for 2047	45N3244	N

Downloaded from LpManual.com Manuals

Table 37. Parts list—Overall (continued)

No.	FRU	FRU no.	CRU ID
20	Base cover assembly for X201 and X201i	75Y4455	
20	Base cover assembly for X201s	75Y4652	
21	Fan assembly, NV, 25 W for X200 • 7454-all • 7455-all • 7457-all • 7458-all • 7459-all • 2023-CTO • 2024-CTO	45N4782	N
21	Fan assembly, NV, 35 W for X200 • 7454-CTO • 7455-CTO • 7457-CTO • 7458-CTO • 7459-CTO • 2023-CTO • 2024-CTO	44C9550	N
21	Fan assembly, LV for X200s • 7462-CTO, 43x, 44x, 45x, 47x, 48x, 49x, 4Ax, 4Bx, 4Cx, 4Dx, 4Ex, 4Fx, 4Gx, 4Hx, 4Kx, 4Lx, 4Nx, 4Px, 4Qx, 4Rx, 4Sx, 4Tx, 4Ux, 4Vx, 4Zx, FMx, FPx, FQx, FRx, FSx, FTx • 7465-CTO, 23x, 24x, 25x, 26x, 27x, 28x, 29x, 2Dx, 2Fx, 2Jx, 2Kx, 2Lx, 2Mx, 2Nx, 2Px, 2Qx, 2Rx, 2Sx, 2Tx, 2Ux, 2Vx, 2Wx, 2Xx, 2Yx, 2Zx, 3Jx, D2x, D3x • 7466-CTO, 33x, 34x, 35x, 38x, 39x, 3Bx, 3Cx, 3Ex, 3Fx, 3Gx, 3Hx, 3Jx, 3Kx, 3Lx, 3Mx, 3Nx, 3Px, 3Qx, 3Rx, 3Sx, 3Tx, 3Ux, 3Vx, 3Wx, 3Xx, 3Yx, 3Zx, 43x, 44x, 45x, 4Nx, 4Px, 4Qx, 4Rx, 4Sx, 4Tx, 4Ux, 4Wx, 4Xx, 54x, 55x, 56x, 5Bx, 5Cx, 5Dx, 5Ex, 5Hx, 5Xx, 5Yx, 92x, 93x, 94x, 95x, 96x, 97x, 98x, 99x, 9Ax, 9Bx, 9Cx, 9Dx, 9Ex, 9Fx, 9Hx, FZx, H8x, H9x, HAx, HBx, HCx, HDx, N2x • 7469-CTO, 52x, 53x, 54x, 5Bx, 5Dx, 5Ex, 5Gx, 5Hx, 5Jx, 5Mx, 5Nx, 5Px, 5Qx, 5Sx, 5Tx, 5Ux, 5Vx, 5Wx, 5Xx, 5Yx, 5Zx, 67x, 68x, 69x, 6Ax, 6Bx, 6Cx, 6Dx, 6Ex, 6Fx, 6Gx, 6Hx, 6Jx, 6Kx, 6Lx, 6Mx, 6Nx, 6Px, 6Qx, 6Rx, 6Tx, 6Ux, 6Vx, 6Wx, 6Xx, 6Yx, 6Zx, 72x, 73x, 74x, 75x, 76x, 77x, 78x, 79x, 7Ax, 7Bx, 7Cx, 7Dx, 7Ex, 7Fx, 7Gx, 7Hx, 7Jx, 7Kx, 7Lx, 7Mx, 7Nx, 7Px, 7Qx, 7Rx, 7Sx, 7Tx, 7Ux, 7Vx, 7Xx, 7Yx, 7Zx, 82x, 83x, 84x, 85x, 86x, 87x, 88x, 89x, 8Ax, 8Bx, 8Cx, 8Dx, 8Ex, 8Fx, 8Gx, 8Hx, 8Jx, 8Kx, 8Lx, 8Mx, 8Nx, 8Px, 8Qx, 8Rx, 8Sx, 8Tx, 95x, 96x, 98x, 99x, 9Dx, 9Ex, 9Gx, G9x, GAx • 7470-CTO, 5Gx, 5Hx, 64x, 65x, 68x, 69x, 6Ax, 6Cx, 6Dx, 6Fx, 6Gx, 6Hx, 6Jx, 6Kx, 6Lx, 6Mx, 6Nx, 6Px, 6Qx, 6Ux, 72x, 74x, 75x • 2046-CTO • 2047-CTO	45N3235	N
21	Fan assembly, ULV for X200s • 7462-CTO, 22x, 23x, 24x, 25x, 26x, 27x, 28x, 29x, 2Ax, 2Bx, 2Cx, 2Dx, 2Ex, 2Fx, 2Gx, 2Hx, 42x, 46x, 4Jx, 4Mx, 4Wx, 4Xx, 4Yx, F2x, F3x, F4x, F5x, F6x, F7x, F8x, F9x, FAx, FBx, FCx, FDx, FEx, FFx, FGx, FHx, FJx, FKx, FLx, FNx, FUx, FVx • 7465-CTO, 2Ex, 2Hx, 3Kx, 3Lx, 3Mx, 3Nx, 3Px, 3Rx, 3Sx, 3Tx, 3Ux, 3Vx, 3Wx, 3Sx, 3Yx, 3Zx, D4x, D6x, D7x, D8x, D9x, DAx, DBx, DCx, DDx, DEx, DFx, DGx, DHx, DJx, DKx, G2x, G3x, G4x, G5x, G6x, G7x, G8x, G9x, GAx, GBx • 7466-CTO, 32x, 3Ax, 3Dx, 46x, 47x, 48x, 49x, 4Ax, 4Bx, 4Cx, 4Dx, 4Ex, 4Fx, 4Hx, 4Jx, 4Kx, 4Lx, 4Mx, 4Vx, 4Yx, 4Zx, 52x, 53x, 57x, 58x, 59x, 5Ax, 5Fx, 5Gx, 5Jx, 5Kx, 5Lx, 5Mx, 5Nx, 5Px, 5Qx, 5Rx, 5Sx, 5Tx, 5Ux, 5Vx, 5Wx, 5Zx, 9Gx, 9Jx, 9Kx, 9Lx, 9Mx, 9Nx, 9Px, 9Qx, 9Rx, 9Sx, 9Tx, 9Ux, 9Vx, 9Wx, 9Xx, 9Yx, 9Zx, DLx, DMx, F2x, F3x, F4x, F5x, F6x, F7x, F8x, F9x, FAx, FBx, FCx, FDx, FEx, FFx, FGx, FHx, FJx, FKx, FLx, FMx, FNx, FPx, FQx, FRx, FSx, FTx, FUx, FVx, FWx, FXx, FYx, H2x, H3x, H4x, H5x, H6x, H7x, HEx	45N3236	N

Downloaded from LpManual.com Manuals

Table 37. Parts list—Overall (continued)

No.	FRU	FRU no.	CRU ID
	• 7469-CTO, 55x, 56x, 57x, 58x, 59x, 5Ax, 5Cx, 5Fx, 5Kx, 5Lx, 5Rx, 62x, 63x, 64x, 65x, 66x, 8Ux, 8Vx, 8Wx, 8Xx, 8Yx, 8Zx, 93x, 94x, 97x, 9Ax, 9Bx, 9Cx, E2x, G2x, G3x, G4x, G5x, G6x, G7x, G8x, GBx, GCx • 7470-CTO, 62x, 63x, 6Bx, 6Ex, 6Rx, 6Sx, 6Tx, 6Vx, 73x, 76x, 77x, 8Tx, 8Ux, 8Zx, E2x • 2046-CTO • 2047-CTO		
21	Fan assembly, NV for X201 and X201i	60Y5422	N
21	Fan assembly, LV for X201s	60Y5423	N
21	Fan assembly, ULV for X201s	60Y5424	N
22a	Speaker kit for X200 and X200s	44C9551	N
22a	Speaker kit for X201s	75Y4690	N
22b	Speaker kit for X201 and X201i	60Y5409	N
23	ExpressCard slot	44C9552	N
23	ExpressCard slot	75Y4733	N
24	Palm rest assembly without fingerprint reader, with logo plate, 35W for X200 • 7454-CTO, 2Nx, 3Hx, 3Kx, 3Rx, 3Tx, 3Yx, 3Zx, 92x, 9Lx, G2x, G8x, G9x, GCx, GDx, GFx, GGx, GHx, GNx, GPx • 7455-CTO, 39x, 3Cx, 4Bx, 4Cx, 4Dx, 85x, 86x, 8Cx, D5x, D6x, DAx, DEx, DGx, DHx, DXx, F2x, F3x, F4x, FTx, FYx • 7457-CTO, 4Ax, 4Gx, 4Hx, 4Jx, 4Ux, 4Vx, 4Wx, 52x, 53x, 55x, 56x, 57x • 7458-CTO, 22x, 2Fx, 2Kx, 2Lx, 5Dx, 63x, 69x, 74x, 78x, 7Fx, 7Gx, 7Hx, 7Jx, 7Mx, 7Nx, 7Wx, 8Bx, 8Cx, 8Dx, 8Qx, 8Wx, F2x, F3x, FNx, FPx, FTx, X5x • 7459-CTO, 5Fx, 68x, 6Bx, 6Lx, 6Px, 6Vx, H3x, M4x • 2023-CTO • 2024-CTO	45N4361	**
24	Palm rest assembly with fingerprint reader, with logo plate, 35W for X200 • 7454-CTO, 22x, 23x, 24x, 25x, 26x, 27x, 28x, 29x, 2Gx, 2Hx, 2Jx, 2Kx, 2Lx, 2Mx, 2Px, 2Qx, 2Rx, 2Sx, 2Tx, 2Ux, 2Vx, 2Wx, 2Xx, 2Yx, 2Zx, 32x, 33x, 34x, 36x, 38x, 3Jx, 3Lx, 3Mx, 3Nx, 3Px, 3Qx, 3Sx, 3Vx, 3Wx, 3Xx, 93x, 95x, 96x, 97x, 98x, 9Bx, 9Cx, 9Fx, 9Gx, 9Hx, 9Jx, G3x, G4x, G5x, G6x, G7x, GBx, GEx, GJx, GKx, GLx, GMx • 7455-CTO, 32x, 33x, 34x, 35x, 36x, 38x, 3Ax, 3Bx, 3Dx, 3Ex, 3Fx, 3Gx, 3Hx, 3Jx, 3Kx, 3Lx, 3Mx, 3Nx, 3Px, 3Qx, 3Rx, 3Sx, 3Tx, 3Ux, 3Vx, 3Wx, 3Xx, 3Yx, 3Zx, 42x, 43x, 44x, 45x, 46x, 47x, 48x, 49x, 4Ax, 4Ex, 4Fx, 4Gx, 4Hx, 4Jx, 4Kx, 4Lx, 4Mx, 4Nx, 4Px, 4Qx, 4Rx, 4Sx, 4Tx, 4Ux, 4Vx, 4Wx, 4Xx, 4Yx, 4Zx, 82x, 83x, 84x, 87x, 88x, 89x, 8Ax, 8Bx, 8Dx, 8Ex, 8Fx, 8Gx, 8Hx, 8Jx, 8Kx, 8Lx, 8Mx, 8Nx, 8Px, 8Qx, 8Rx, 8Sx, 8Tx, 8Ux, 8Vx, 8Wx, 8Xx, 8Yx, 8Zx, D2x, D3x, D7x, D8x, D9x, DBx, DCx, DDx, DFx, DJx, DKx, DLx, DMx, DNx, DPx, DQx, DRx, DSx, DTx, DUx, DVx, DWx, DYx, DZx, F5x, F6x, F7x, F9x, FBx, FCx, FDx, FEx, FFx, FGx, FHx, FJx, FKx, FLx, FMx, FNx, FPx, FQx, FRx, FSx, FUx, FVx, FWx, FXx, FZx, N2x, N3x, N4x, N5x, P2x, P3x, P4x, P5x, P6x, P7x, P9x, PAx, PBx, PCx, PDx, PEx, PFx, PGx, PHx, PJx • 7457-CTO, 42x, 43x, 44x, 45x, 46x, 47x, 48x, 49x, 4Bx, 4Cx, 4Dx, 4Ex, 4Fx, 4Kx, 4Lx, 4Mx, 4Nx, 4Px, 4Qx, 4Rx, 4Sx, 4Tx, 54x, 58x • 7458-CTO, 24x, 25x, 26x, 27x, 28x, 29x, 2Ax, 2Bx, 2Cx, 2Dx, 2Ex, 2Mx, 2Nx, 2Px, 2Qx, 2Rx, 2Sx, 2Tx, 2Vx, 4Xx, 4Yx, 52x, 53x, 54x, 55x, 56x, 57x, 58x, 59x, 5Ax, 5Bx, 5Cx, 5Ex, 5Fx, 5Hx, 5Jx, 5Lx, 5Mx, 5Nx, 5Px, 5Qx, 5Rx, 5Sx, 5Tx, 62x, 64x, 65x, 66x, 67x, 68x, 6Ax, 6Bx, 6Cx, 6Dx, 6Ex, 6Jx, 6Kx, 6Lx, 6Mx, 6Nx, 6Px, 6Qx, 6Rx, 6Sx, 6Tx, 6Ux, 6Vx, 6Wx, 6Xx, 6Yx, 6Zx, 72x, 73x, 76x, 77x, 79x, 7Bx, 7Cx, 7Dx, 7Ex, 7Kx, 7Lx, 7Px, 7Qx, 7Rx, 7Sx, 7Tx, 7Ux, 7Vx, 7Xx, 7Yx, 7Zx, 82x, 83x, 84x, 85x, 86x, 87x, 88x, 89x, 8Ax, 8Ex, 8Fx, 8Gx, 8Hx, 8Jx, 8Kx, 8Lx, 8Mx, 8Nx, 8Px, 8Rx, 8Sx, 8Tx, 8Xx, 8Yx, 8Zx, E2x, F4x, F5x, F6x, F7x, F8x, F9x, FAx, FCx, FDx, FEx, FFx, FGx, FHx, FJx, FKx, FLx, FMx, FQx, FSx, FUx, FVx, FWx, FXx, FYx, G3x, G4x, G5x, G6x, G7x, G8x, G9x, GBx, GCx, GDx, GEx, GFx, M2x, M3x, X4x	45N4362	**

Downloaded from LpManual.com Manuals

Table 37. Parts list—Overall (continued)

No.	FRU	FRU no.	CRU ID
	• 7459-CTO, 5Ex, 62x, 63x, 64x, 65x, 66x, 67x, 69x, 6Ax, 6Cx, 6Dx, 6Ex, 6Fx, 6Gx, 6Jx, 6Kx, 6Mx, 6Nx, 6Qx, 6Rx, 6Sx, 6Tx, 6Ux, 6Wx, 6Xx, 6Yx, 6Zx, 72x, 73x, 74x, 75x, E3x, H2x, H4x, H5x, H6x, H7x, M2x, M3x • 2023-CTO • 2024-CTO		
24	Palm rest assembly without fingerprint reader, without touch pad, with logo plate, 35W for X201 and X201i • 3249-CTO, 27x, 29x • 3323-CTO, 4Ex, 4Fx, 4Kx, 9Cx, 9Ex, C9x, CAx, EZx, LPx, NBx, NCx, NDx, NKx, NLx • 3357-CTO • 3626-CTO, GSx, GXx, H5x • 3680-CTO, P7x, PAx, PDx, PHx, Q6x • 3712-CTO • 4492-CTO	60Y5414	**
24	Palm rest assembly without fingerprint reader, with touch pad, with logo plate, 35W for X201 and X201i • 3249-CTO, 24x, 2Cx, J2x, 2Jx, 2Kx, J4x, J6x, J7x, J9x, JAx, JFx, JGx, JHx, JJx, JKx, JLx, JMx, 33x, 3Sx, 34x, 3Tx, 35x, 3Ux, 36x, 3Vx, 37x, NVx, 3Wx, MCx, MDx, MUx, MVx, MWx, MXx, MZx, 2Xx, 2Yx, 2Zx, 39x, 3Bx, 3Dx, 3Ex, 3Fx, 3Hx, 3Kx, 3Mx, CBx, CCx, CDx, CFx, QBx, QLx, QNx, QPx, 1Fx, 1Gx, 1Hx, 1Jx • 3323-CTO, 1Zx, 3Zx, 42x, 43x, 44x, 45x, 49x, 4Ax, 4Zx, 7Yx, 7Zx, 85x, 9Nx, 9Px, 9Rx, AUx, AVx, AXx, AZx, B9x, BAx, BBx, BSx, BTx, BWx, BYx, BZx, C4x, C5x, C6x, C7x, JVx, JWx, JXx, JYx, JZx, K7x, KUx, KVx, KWx, LFx, LHx, LJx, LKx, LLx, LRx, LSx, LTx, M7x, N2x, N3x, NEx, NGx, NHx, QUx • 3357-CTO, D4x, D6x • 3626-CTO, F2x, F8x, G2x, G3x, G4x, G9x, GAx, HVx, HWx, QFx, QGx, QHx, R9x, RYx, RZx • 3680-CTO, 4Qx, F8x, P2x, PLx • 3712-CTO • 4492-CTO	60Y5415	**
24	Palm rest assembly with fingerprint reader, without touch pad, with logo plate, 35W for X201 and X201i • 3249-CTO, 26x, 28x, NRx, NSx, NTx, Nux, MGx, MHx, MJx, MKx, MLx, MMx, MNx, MPx • 3323-CTO, 1Mx, 1Nx, 1Sx, 1Tx, 4Gx, 4Hx, 4Jx, 4Lx, 4Mx, 4Nx, 4Px, 4Rx, 4Sx, 4Tx, 53x, 54x, 55x, 5Bx, 5Cx, 5Dx, 5Ex, 5Fx, 5Gx, 5Hx, 5Jx, 5Kx, 5Lx, 5Mx, 5Nx, 5Px, 5Rx, 5Sx, 5Tx, 5Ux, 5Vx, 5Wx, 5Yx, 5Zx, 62x, 63x, 64x, 65x, 66x, 67x, 68x, 69x, 6Ax, 6Bx, 6Cx, 6Dx, 6Ex, 6Fx, 6Gx, 6Hx, 6Jx, 6Kx, 6Lx, 6Mx, 6Nx, 6Px, 6Rx, 6Sx, 6Tx, 6Ux, 6Vx, 6Wx, 6Yx, 6Zx, 72x, 73x, 74x, 75x, 76x, 77x, 78x, 79x, 7Ax, 7Bx, 7Cx, 7Dx, 7Ex, 7Fx, 7Gx, 7Hx, 7Jx, 7Kx, 7Lx, 7Mx, 7Nx, 7Px, 7Rx, 7Sx, 7Tx, 7Ux, 7Vx, 7Wx, 7Xx, 9Jx, 9Kx, 9Lx, 9Mx, A8x, A9x, AAx, ABx, ACx, DKx, R2x • 3357-CTO • 3626-CTO, FCx, FDx, FGx, FHx, FLx, FTx, FXx, HDx • 3680-CTO • 3712-CTO • 4492-CTO	60Y5416	**

Downloaded from LpManual.com Manuals

Table 37. Parts list—Overall (continued)

No.	FRU	FRU no.	CRU ID
24	Palm rest assembly with fingerprint reader, with touch pad, with logo plate, 35W for X201 and X201i • 3249-CTO, 22x, 23x, 25x, 2Ax, 2Bx, 2Dx, 2Ex, 2Fx, 2Gx, 2Hx, 2Lx, J3x, J5x, J8x, 2Nx, 2Mx, 2Rx, 2Px, 2Sx, 2Tx, 2Ux, 2Vx, JNx, JPx, JQx, JRx, JSx, JTx, JUx, 32x, 3Rx, 38x, C2x, C3x, MRx, MSx, MTx, MYx, 2Wx, 3Ax, 3Cx, 3Gx, 3Jx, 3Lx, 3Nx, CEx, CGx, 3Xx, C8x, CKx, CHx, CMx, CNx, CPx, CRx, CSx, CTx, CUx, CJx, CLx, DFx, 3Yx, EPx, ERx, ESx, DCx, DDx, DEx, DGx, DHx, DJx, ENx, QMx, QRx, QCx, QDx, QAx, Q9x, 19x, 1Ax, 1Bx, 1Cx, 1Dx, 1Ex • 3323-CTO, 12x, 1Lx, 1Px, 1Rx, 1Ux, 1Vx, 1Wx, 1Xx, 1Yx, 3Qx, 46x, 48x, 4Cx, 4Dx, 4Ux, 4Vx, 4Wx, 4Yx, 52x, 56x, 57x, 58x, 59x, 5Ax, 82x, 83x, 84x, 86x, 87x, 88x, 89x, 8Ax, 8Bx, 8Cx, 8Dx, 8Ex, 8Fx, 8Gx, 8Jx, 8Kx, 8Lx, 8Nx, 8Px, 8Rx, 8Sx, 8Tx, 8Ux, 8Vx, 8Wx, 8Xx, 8Yx, 8Zx, 92x, 93x, 94x, 95x, 96x, 97x, 98x, 99x, 9Ax, 9Bx, 9Dx, 9Fx, 9Gx, 9Hx, 9Sx, 9Tx, 9Ux, 9Vx, 9Wx, 9Yx, 9Zx, A2x, A3x, A4x, A5x, A6x, A7x, ADx, AEx, AFx, AGx, AHx, AJx, AKx, ALx, AMx, ANx, APx, ARx, ASx, ATx, AWx, AYx, B2x, B3x, B4x, B5x, B6x, B7x, B8x, BCx, BDx, BEx, BFx, BGx, BHx, BJx, BKx, BLx, BMx, BNx, BPx, BRx, BUx, BVx, BXx, CVx, CWx, CXx, CYx, CZx, D8x, D9x, DAx, DBx, DLx, DMx, DNx, DPx, DRx, DSx, DTx, DUx, DVx, DWx, DXx, DYx, DZx, E2x, E3x, E4x, E5x, E6x, E7x, E8x, E9x, EAx, EBx, EEx, EFx, EGx, EHx, EJx, EKx, ELx, EMx, ETx, EUx, EVx, EWx, EXx, EYx, JBx, JCx, JDx, JEx, K2x, K3x, K4x, K5x, K6x, K8x, K9x, KAx, KCx, KDx, KEx, KFx, KGx, KHx, KJx, KLx, KMx, KNx, KPx, KRx, KSx, KTx, KYx, KZx, L2x, L3x, L4x, L5x, L6x, L7x, L8x, LAx, LBx, LCx, LDx, LEx, LGx, LUx, LVx, LWx, LXx, LYx, LZx, M2x, M3x, M4x, M5x, M6x, M8x, M9x, MAx, MBx, MEx, MFx, N4x, N5x, N6x, N7x, N8x, N9x, NAx, NFx, NJx, NNx, NPx, NWx, NXx, NYx, NZx, PMx, PNx, PPx, PRx, PSx, PTx, PUx, Qex, QVx, QWx, QXx, QYx, QZx, RAx, RBx, RCx, RDx, REx, RFx, RGx, RHx, RJx, RKx, RLx, RNx, RPx, RRx, RSx • 3357-CTO, 3Px, D2x, D3x, D5x, D7x, LMx, LNx • 3626-CTO, 11x, 12x, 13x, 14x, 15x, 16x, 17x, 18x, 19x, 1Kx, F3x, F4x, F5x, F6x, F7x, F9x, FAx, FBx, FEx, FFx, FJx, FKx, FMx, FNx, FPx, FRx, FSx, FUx, FVx, FWx, FYx, FZx, G5x, G6x, G7x, G8x, GBx, GCx, GDx, GEx, GFx, GHx, GJx, GKx, GLx, GMx, GNx, GPx, GRx, GTx, GUx, GVx, GWx, GYx, GZx, H2x, H3x, H4x, H6x, H7x, H8x, H8x, H9x, H9x, HAx, HBx, HCx, HEx, HFx, HGx, HHx, HJx, HKx, HLx, HMx, HUx, HXx, Hyx, HZx, PVx, PWx, PXx, PYx, PZx, Q2x, Q3x, Q4x, Q5x, QJx, QKx, QSx, QTx, R3x, R4x, R4x, R5x, R5x, R6x, R6x, R7x, R8x, RMx, RTx, RUx, RVx, RWx, RXx, N2x, Q8x • 3680-CTO, 11x, 14x, F7x, F9x, FAx, FBx, H8x, H9x, HAx, HBx, HCx, HNx, HPx, HQx, HRx, HSx, HTx, P3x, P4x, P5x, P6x, PJx, P8x, P9x, PBx, PCx, PEx, PFx, PGx, PKx, Q7x, N2x • 3712-CTO • 4492-CTO	60Y5417	**
24	Palm rest assembly without fingerprint reader, 25W for X200s • 7462-CTO, 22x, 23x, 24x, 25x, 27x, 28x, 29x, 2Ax, 2Cx, 2Dx, 2Ex, 2Fx, 2Gx, 42x, 4Wx, 4Xx, F2x, F3x, F4x, F5x, F6x, F7x, F8x, FAx, FBx, FCx, FDx, FFx, FGx, FHx, FKx, FLx, FNx • 7465-CTO, 2Wx, 2Xx, 2Zx, 3Mx, 3Nx, 3Px, 3Rx, 3Sx, 3Tx, 3Ux, 3Wx, 3Xx, 3Yx, D2x, D3x, D4x, D6x, D7x, D8x, D9x, DAx, DBx, DCx, DDx, DEx, DGx, DHx, DJx, DKx, G2x, G3x, G5x, G6x, G7x, G8x, G9x • 7466-CTO, 3Mx, 3Nx, 47x, 48x, 49x, 4Ax, 4Bx, 4Cx, 4Dx, 4Ex, 4Fx, 4Hx, 4Jx, 4Yx, 4Zx, 52x, 59x, 5Ax, 5Fx, 5Gx, 5Jx, 5Kx, 5Lx, 5Mx, 5Nx, 5Px, 5Qx, 5Tx, 5Ux, 5Vx, 9Jx, 9Rx, 9Xx, DLx, F2x, F3x, F4x, F5x, F6x, F9x, FAx, FBx, FCx, FDx, FEx, FFx, FGx, FHx, FNx, FVx, H3x, H5x, H6x, H7x • 7469-CTO, 58x, 59x, 5Ax, 5Cx, 5Fx, 5Kx, 62x, 63x, 64x, 6Fx, 7Mx, 86x, 8Ux, 8Vx, 8Xx, 9Ax, 9Bx, G6x, G7x, GCx • 7470-CTO, 62x, 63x, 65x, 6Rx, 6Sx, E2x • 2046-CTO • 2047-CTO	45N4363	**

Downloaded from LpManual.com Manuals

Table 37. Parts list—Overall (continued)

No.	FRU	FRU no.	CRU ID
24	Palm rest assembly with fingerprint reader, 25W for X200s • 7462-CTO, 26x, 2Bx, 2Hx, 43x, 44x, 45x, 46x, 47x, 48x, 49x, 4Ax, 4Bx, 4Cx, 4Dx, 4Ex, 4Fx, 4Gx, 4Hx, 4Jx, 4Kx, 4Lx, 4Mx, 4Nx, 4Px, 4Qx, 4Rx, 4Sx, 4Tx, 4Ux, 4Vx, 4Yx, 4Zx, F9x, FEx, FJx, FMx, FPx, FQx, FRx, FSx, FTx, FUx, FVx • 7465-CTO, 23x, 24x, 25x, 26x, 27x, 28x, 29x, 2Dx, 2Ex, 2Fx, 2Hx, 2Jx, 2Kx, 2Lx, 2Mx, 2Nx, 2Px, 2Qx, 2Rx, 2Sx, 2Tx, 2Ux, 2Vx, 2Yx, 3Jx, 3Kx, 3Lx, 3Vx, 3Zx, DFx, G4x, GAx, GBx • 7466-CTO, 32x, 33x, 34x, 35x, 38x, 39x, 3Ax, 3Bx, 3Cx, 3Dx, 3Ex, 3Fx, 3Gx, 3Hx, 3Jx, 3Kx, 3Lx, 3Px, 3Qx, 3Rx, 3Sx, 3Tx, 3Ux, 3Vx, 3Wx, 3Xx, 3Yx, 3Zx, 43x, 44x, 45x, 46x, 4Kx, 4Lx, 4Mx, 4Nx, 4Px, 4Qx, 4Rx, 4Sx, 4Tx, 4Ux, 4Vx, 4Wx, 4Xx, 53x, 54x, 55x, 56x, 57x, 58x, 5Bx, 5Cx, 5Dx, 5Ex, 5Hx, 5Rx, 5Sx, 5Wx, 5Xx, 5Yx, 5Zx, 92x, 93x, 94x, 95x, 96x, 97x, 98x, 99x, 9Ax, 9Bx, 9Cx, 9Dx, 9Ex, 9Fx, 9Gx, 9Hx, 9Kx, 9Lx, 9Mx, 9Nx, 9Px, 9Qx, 9Sx, 9Tx, 9Ux, 9Vx, 9Wx, 9Yx, 9Zx, DMx, F7x, F8x, FJx, FKx, FLx, FMx, FPx, FQx, FRx, FSx, FTx, FUx, FWx, FXx, FYx, FZx, H2x, H4x, H8x, H9x, HAx, HBx, HCx, HDx, HEx, N2x • 7469-CTO, 52x, 53x, 54x, 55x, 56x, 57x, 5Bx, 5Dx, 5Ex, 5Gx, 5Hx, 5Jx, 5Lx, 5Mx, 5Nx, 5Px, 5Qx, 5Rx, 5Sx, 5Tx, 5Ux, 5Vx, 5Wx, 5Xx, 5Yx, 5Zx, 65x, 66x, 67x, 68x, 69x, 6Ax, 6Bx, 6Cx, 6Dx, 6Ex, 6Gx, 6Hx, 6Jx, 6Kx, 6Lx, 6Mx, 6Nx, 6Px, 6Qx, 6Rx, 6Tx, 6Ux, 6Vx, 6Wx, 6Xx, 6Yx, 6Zx, 72x, 73x, 74x, 75x, 76x, 77x, 78x, 79x, 7Ax, 7Bx, 7Cx, 7Dx, 7Ex, 7Fx, 7Gx, 7Hx, 7Jx, 7Kx, 7Lx, 7Nx, 7Px, 7Qx, 7Rx, 7Sx, 7Tx, 7Ux, 7Vx, 7Xx, 7Yx, 7Zx, 82x, 83x, 84x, 85x, 87x, 88x, 89x, 8Ax, 8Bx, 8Cx, 8Dx, 8Ex, 8Fx, 8Gx, 8Hx, 8Jx, 8Kx, 8Lx, 8Mx, 8Nx, 8Px, 8Qx, 8Rx, 8Sx, 8Tx, 8Wx, 8Yx, 8Zx, 93x, 94x, 95x, 96x, 97x, 98x, 99x, 9Cx, 9Dx, 9Ex, 9Gx, E2x, G2x, G3x, G4x, G5x, G8x, G9x, GAx, GBx • 7470-CTO, 5Gx, 5Hx, 64x, 68x, 69x, 6Ax, 6Bx, 6Cx, 6Dx, 6Ex, 6Fx, 6Gx, 6Hx, 6Jx, 6Kx, 6Lx, 6Mx, 6Nx, 6Px, 6Qx, 6Tx, 6Ux, 6Vx, 72x, 73x, 74x, 75x, 76x, 77x, 8Tx, 8Ux, 8Zx • 2046-CTO • 2047-CTO	45N4364	**
24	Palm rest assembly without fingerprint reader, without touch pad, with logo plate, 25W for X201s • 5129-CTO • 5143-CTO • 5385-CTO • 5397-CTO, F4x, F9x • 5413-CTO • 5442-CTO • 5446-CTO	60Y5418	**
24	Palm rest assembly without fingerprint reader, with touch pad, with logo plate, 25W for X201s • 5129-CTO • 5143-CTO, 4Hx, 4Jx, 4Mx • 5385-CTO • 5397-CTO • 5413-CTO • 5442-CTO • 5446-CTO	60Y5419	**
24	Palm rest assembly with fingerprint reader, without touch pad, with logo plate, 25W for X201s • 5129-CTO, 72x, R1x • 5143-CTO, 22x, 23x, 29x, 2Ax, 2Bx, 2Cx, 2Dx, 2Ex, 2Fx, 2Gx, 2Hx, 2Jx, 2Kx, 2Lx, 2Mx, 2Nx, 2Px, 2Rx, 2Sx, 2Tx, 2Ux, 2Vx, 2Wx, 2Yx, 2Zx, 32x, 33x, 34x, 35x, 36x, 37x, 38x, 39x, 3Ax • 5385-CTO, D2x • 5397-CTO, F2x, FHx, FKx, FSx, FTx, FUx, FVx • 5413-CTO • 5442-CTO • 5446-CTO	60Y5420	**

Downloaded from LpManual.com Manuals

Table 37. Parts list—Overall (continued)

No.	FRU	FRU no.	CRU ID
24	Palm rest assembly with fingerprint reader, with touch pad, with logo plate, 25W for X201s • 5129-CTO, 72x, 73x, 74x, 75x, 76x, 77x, 78x, R1x, • 5143-CTO, 24x, 25x, 26x, 27x, 28x, 3Ux, 3Vx, 3Wx, 3Yx, 3Zx, 42x, 43x, 44x, 45x, 46x, 47x, 48x, 49x, 4Ax, 4Bx, 4Cx, 4Dx, 4Ex, 4Gx, 4Kx, 4Lx, 4Nx, 4Px • 5385-CTO, D3x, D4x, D5x, D6x, D7x, D8x, D9x • 5397-CTO, F3x, F5x, F6x, F7x, F8x, FAx, FBx, FCx, FDx, FEx, FFx, FGx, FJx, FMx, FNx, FPx, FRx, FWx, FXx, FYx, FZx, G2x, G3x, G4x, G5x, G6x, G7x, G8x, G9x, GAx, GBx, GCx, GDx, GEx, GFx, GGx • 5413-CTO, FDx, FEx, FFx, FGx, L2x, L3x, L4x, L5x, L6x, L7x, L8x, L9x, LAx, LBx • 5442-CTO • 5446-CTO	60Y5421	**
25	Keyboard (see “Keyboard” on page 246.)		
26	TrackPoint stick caps	91P9642	*
—	Non-mercury label (cover the notice for mercury for LED-backlight LCD models)	45N5784	*
—	AC adapter (see “AC adapters” on page 247.)		

LCD FRUs

In ThinkPad X200, X200s, X200si, X201, X201i, and X201s, there are following types of LCDs.

- “12.1-in. WXGA TFT” on page 221
- “12.1-in. WXGA+ TFT” on page 242

Downloaded from LpManual.com Manuals

12.1-in. WXGA TFT

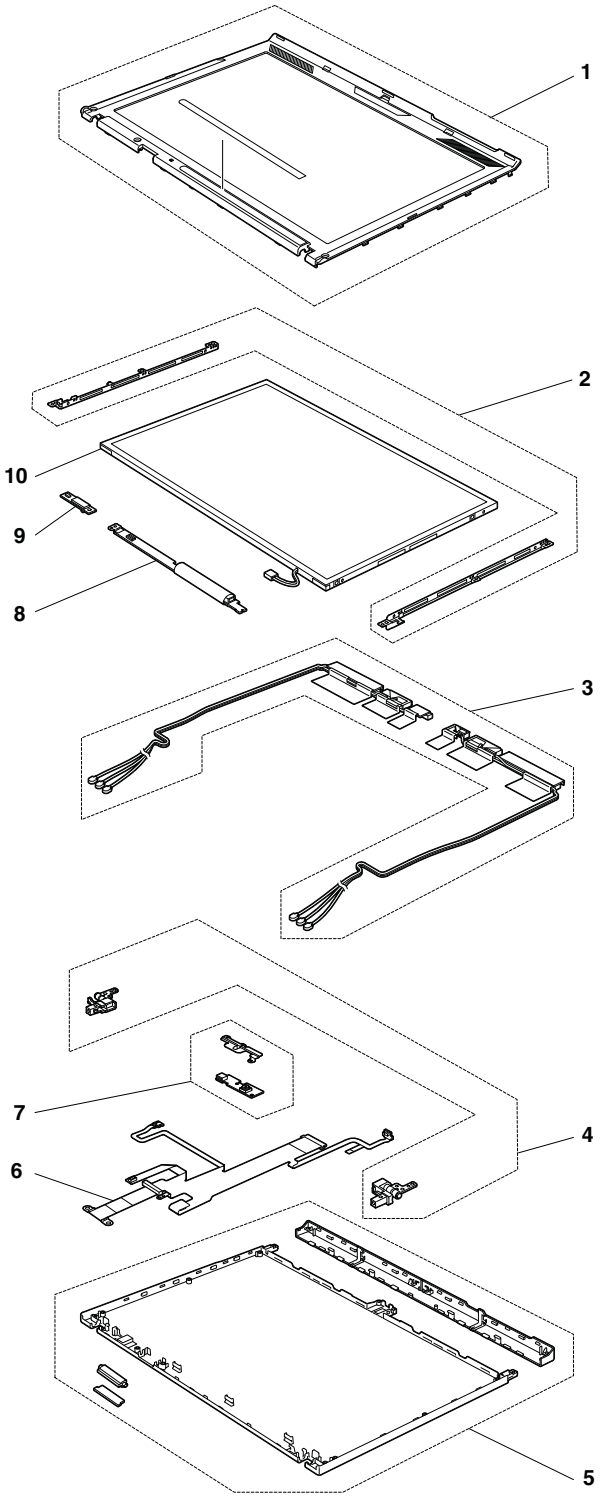

Downloaded from LpManual.com Manuals

Table 38. Parts list—12.1-in. WXGA TFT

No.	FRU	FRU no.	CRU ID
1	LCD bezel assembly • 7454-all • 7455-all • 7457-all • 7458-all • 7459-all • 2023-CTO • 2024-CTO • 7462-CTO, 22x, 23x, 24x, 25x, 26x, 27x, 28x, 29x, 2Ax, 2Bx, 2Cx, 2Dx, 2Ex, 2Fx, 2Gx, 2Hx, 42x, 43x, 44x, 45x, 46x, 47x, 48x, 49x, 4Ax, 4Bx, 4Cx, 4Dx, 4Ex, 4Fx, 4Gx, 4Hx, 4Qx, 4Rx, 4Sx, 4Tx, 4Ux, 4Vx, 4Wx, 4Xx, 4Yx, F2x, F3x, F4x, F5x, F6x, F7x, F8x, F9x, FAx, FBx, FCx, FDx, FEx, FFx, FGx, FHx, FJx, FKx, FLx, FMx, FNx, FRx, FSx, FUx, FVx • 7465-CTO, 23x, 24x, 25x, 26x, 27x, 28x, 29x, 2Dx, 2Lx, 2Mx, 2Nx, 2Px, 2Qx, 2Rx, 2Sx, 2Tx, 2Ux, 2Vx, 2Wx, 2Xx, 2Zx, 3Jx, 3Lx, 3Nx, 3Px, 3Rx, 3Sx, 3Tx, 3Ux, 3Vx, 3Wx, 3Xx, 3Yx, 3Zx, D4x, D6x, D7x, D8x, D9x, DAx, DBx, DCx, DDx, DEx, DFx, DGx, DHx, DJx, DKx, G2x, G3x, G4x, G5x, G6x, G7x, G8x, G9x, GAx, GBx • 7466-CTO, 32x, 33x, 34x, 35x, 38x, 39x, 3Px, 3Qx, 3Rx, 3Sx, 3Tx, 3Ux, 3Vx, 3Xx, 3Yx, 3Zx, 43x, 45x, 46x, 47x, 48x, 49x, 4Ax, 4Bx, 4Cx, 4Dx, 4Ex, 4Fx, 4Hx, 4Jx, 4Kx, 4Lx, 4Mx, 4Nx, 4Px, 4Qx, 4Sx, 4Vx, 4Wx, 4Xx, 4Yx, 4Zx, 52x, 53x, 54x, 55x, 56x, 57x, 58x, 59x, 5Ax, 5Bx, 5Cx, 5Dx, 5Ex, 5Fx, 5Gx, 5Hx, 5Jx, 5Kx, 5Lx, 5Mx, 5Nx, 5Px, 5Qx, 5Rx, 5Sx, 5Tx, 5Ux, 5Vx, 5Wx, 5Xx, 5Yx, 5Zx, 92x, 93x, 95x, 96x, 97x, 98x, 99x, 9Ax, 9Bx, 9Cx, 9Dx, 9Ex, 9Fx, 9Gx, 9Hx, 9Jx, 9Kx, 9Lx, 9Mx, 9Nx, 9Px, 9Qx, 9Rx, 9Sx, 9Tx, 9Ux, 9Vx, 9Wx, 9Xx, 9Yx, 9Zx, DLx, DMx, F2x, F3x, F4x, F5x, F6x, F7x, F8x, F9x, FAx, FBx, FCx, FDx, FEx, FFx, FGx, FHx, FJx, FKx, FLx, FMx, FNx, FPx, FQx, FRx, FSx, FTx, FUx, FVx, FWx, FXx, FYx, FZx, H2x, H3x, H4x, H5x, H6x, H7x, H8x, H9x, HAx, HBx, HCx, HDx, HEx, N2x • 7469-CTO, 52x, 53x, 55x, 56x, 57x, 58x, 59x, 5Ax, 5Bx, 5Cx, 5Dx, 5Ex, 5Fx, 5Gx, 5Hx, 5Jx, 5Kx, 5Sx, 5Tx, 5Yx, 5Zx, 62x, 63x, 64x, 65x, 66x, 67x, 68x, 6Bx, 6Cx, 6Dx, 6Ex, 6Fx, 6Gx, 6Hx, 6Jx, 6Kx, 6Lx, 6Mx, 6Nx, 6Px, 6Qx, 6Rx, 6Tx, 6Ux, 6Vx, 6Wx, 6Xx, 6Yx, 6Zx, 72x, 73x, 74x, 75x, 76x, 77x, 79x, 7Bx, 7Cx, 7Dx, 7Ex, 7Fx, 7Hx, 7Jx, 7Kx, 7Lx, 7Qx, 7Rx, 7Sx, 7Tx, 7Xx, 83x, 84x, 8Bx, 8Cx, 8Dx, 8Ex, 8Fx, 8Lx, 8Mx, 8Nx, 8Rx, 8Sx, 8Tx, 8Ux, 8Vx, 8Wx, 8Xx, 8Yx, 8Zx, 93x, 94x, 95x, 96x, 97x, 98x, 99x, 9Ax, 9Bx, 9Cx, 9Dx, 9Ex, 9Gx, E2x, G2x, G3x, G4x, G5x, G6x, G7x, G8x, G9x, GAx, GBx, GCx • 7470-CTO, 5Gx, 5Hx, 62x, 63x, 65x, 68x, 69x, 6Ax, 6Hx, 6Px, 6Rx, 6Sx, 6Tx, 6Ux, 6Vx, 72x, 73x, 74x, 75x, 76x, 77x, 8Tx, 8Ux, 8Zx, E2x • 2046-CTO • 2047-CTO • 3249-all • 3323-all • 3357-all • 3626-all • 3680-all • 3712-all • 4492-all	44C9541 04W0360	N
2	LCD bracket L/R • 7454-all • 7455-all • 7457-all • 7458-all • 7459-all • 2023-CTO • 2024-CTO • 7462-CTO, 22x, 23x, 24x, 25x, 26x, 27x, 28x, 29x, 2Ax, 2Bx, 2Cx, 2Dx, 2Ex, 2Fx, 2Gx, 2Hx, 42x, 43x, 44x, 45x, 46x, 47x, 48x, 49x, 4Ax, 4Bx, 4Cx, 4Dx, 4Ex, 4Fx, 4Gx, 4Hx, 4Qx, 4Rx, 4Sx, 4Tx, 4Ux, 4Vx, 4Wx, 4Xx, 4Yx, F2x, F3x, F4x, F5x, F6x, F7x, F8x, F9x, FAx, FBx, FCx, FDx, FEx, FFx, FGx, FHx, FJx, FKx, FLx, FMx, FNx, FRx, FSx, FUx, FVx	44C9545	N

Downloaded from LpManual.com Manuals

Table 38. Parts list—12.1-in. WXGA TFT (continued)

No.	FRU	FRU no.	CRU ID
	• 7465-CTO, 23x, 24x, 25x, 26x, 27x, 28x, 29x, 2Dx, 2Lx, 2Mx, 2Nx, 2Px, 2Qx, 2Rx, 2Sx, 2Tx, 2Ux, 2Vx, 2Wx, 2Xx, 2Zx, 3Jx, 3Lx, 3Nx, 3Px, 3Rx, 3Sx, 3Tx, 3Ux, 3Vx, 3Wx, 3Xx, 3Yx, 3Zx, D4x, D6x, D7x, D8x, D9x, DAx, DBx, DCx, DDx, DEx, DFx, DGx, DHx, DJx, DKx, G2x, G3x, G4x, G5x, G6x, G7x, G8x, G9x, GAx, GBx • 7466-CTO, 32x, 33x, 34x, 35x, 38x, 39x, 3Px, 3Qx, 3Rx, 3Sx, 3Tx, 3Ux, 3Vx, 3Xx, 3Yx, 3Zx, 43x, 45x, 46x, 47x, 48x, 49x, 4Ax, 4Bx, 4Cx, 4Dx, 4Ex, 4Fx, 4Hx, 4Jx, 4Kx, 4Lx, 4Mx, 4Nx, 4Px, 4Qx, 4Sx, 4Vx, 4Wx, 4Xx, 4Yx, 4Zx, 52x, 53x, 54x, 55x, 56x, 57x, 58x, 59x, 5Ax, 5Bx, 5Cx, 5Dx, 5Ex, 5Fx, 5Gx, 5Hx, 5Jx, 5Kx, 5Lx, 5Mx, 5Nx, 5Px, 5Qx, 5Rx, 5Sx, 5Tx, 5Ux, 5Vx, 5Wx, 5Xx, 5Yx, 5Zx, 92x, 93x, 95x, 96x, 97x, 98x, 99x, 9Ax, 9Bx, 9Cx, 9Dx, 9Ex, 9Fx, 9Gx, 9Hx, 9Jx, 9Kx, 9Lx, 9Mx, 9Nx, 9Px, 9Qx, 9Rx, 9Sx, 9Tx, 9Ux, 9Vx, 9Wx, 9Xx, 9Yx, 9Zx, DLx, DMx, F2x, F3x, F4x, F5x, F6x, F7x, F8x, F9x, FAx, FBx, FCx, FDx, FEx, FFx, FGx, FHx, FJx, FKx, FLx, FMx, FNx, FPx, FQx, FRx, FSx, FTx, FUx, FVx, FWx, FXx, FYx, FZx, H2x, H3x, H4x, H5x, H6x, H7x, H8x, H9x, HAx, HBx, HCx, HDx, HEx, N2x • 7469-CTO, 52x, 53x, 55x, 56x, 57x, 58x, 59x, 5Ax, 5Bx, 5Cx, 5Dx, 5Ex, 5Fx, 5Gx, 5Hx, 5Jx, 5Kx, 5Sx, 5Tx, 5Yx, 5Zx, 62x, 63x, 64x, 65x, 66x, 67x, 68x, 6Bx, 6Cx, 6Dx, 6Ex, 6Fx, 6Gx, 6Hx, 6Jx, 6Kx, 6Lx, 6Mx, 6Nx, 6Px, 6Qx, 6Rx, 6Tx, 6Ux, 6Vx, 6Wx, 6Xx, 6Yx, 6Zx, 72x, 73x, 74x, 75x, 76x, 77x, 79x, 7Bx, 7Cx, 7Dx, 7Ex, 7Fx, 7Hx, 7Jx, 7Kx, 7Lx, 7Qx, 7Rx, 7Sx, 7Tx, 7Xx, 83x, 84x, 8Bx, 8Cx, 8Dx, 8Ex, 8Fx, 8Lx, 8Mx, 8Nx, 8Rx, 8Sx, 8Tx, 8Ux, 8Vx, 8Wx, 8Xx, 8Yx, 8Zx, 93x, 94x, 95x, 96x, 97x, 98x, 99x, 9Ax, 9Bx, 9Cx, 9Dx, 9Ex, 9Gx, E2x, G2x, G3x, G4x, G5x, G6x, G7x, G8x, G9x, GAx, GBx, GCx • 7470-CTO, 5Gx, 5Hx, 62x, 63x, 65x, 68x, 69x, 6Ax, 6Hx, 6Px, 6Rx, 6Sx, 6Tx, 6Ux, 6Vx, 72x, 73x, 74x, 75x, 76x, 77x, 8Tx, 8Ux, 8Zx, E2x • 2046-CTO • 2047-CTO • 3249-all • 3323-all • 3357-all • 3626-all • 3680-all • 3712-all • 4492-all		
3	Wireless LAN antenna kit • 7454-CTO, 26x, 29x, 2Gx, 2Hx, 2Nx, 2Qx, 2Rx, 2Wx, 2Xx, 2Yx, 3Lx, 3Mx, 3Nx, 3Px, 3Yx, 3Zx, 92x, 95x, 97x, 98x, G4x, G5x, G6x, G7x, G8x, G9x, GFx, GGx, GLx, GMx • 7455-CTO, 36x, 38x, 39x, 3Cx, 3Fx, 3Gx, 3Hx, 3Jx, 3Kx, 3Rx, 3Ux, 3Vx, 3Wx, 49x, 4Hx, 4Jx, 4Kx, 4Lx, 4Mx, 4Nx, 4Px, 85x, 86x, 8Nx, D5x, D6x, DAx, DCx, DDx, DEx, DGx, DHx, DMx, DSx, DTx, DXx, N3x, N4x • 7457-CTO, 45x, 48x, 4Ax, 4Cx, 4Dx, 4Gx, 4Hx, 4Nx, 4Px, 4Qx, 4Ux, 4Vx, 52x, 55x • 7458-CTO, 22x, 24x, 25x, 27x, 29x, 2Ax, 2Sx, 54x, 56x, 57x, 5Dx, 5Ex, 64x, 69x, 6Qx, 6Xx, 72x, 73x, 74x, 78x, 7Mx, 7Nx, 7Sx, 7Wx, 88x, 8Bx, 8Cx, 8Dx, 8Jx, 8Px, 8Qx, 8Yx, F2x, F3x, F4x, FDx, FHx, FJx, FNx, FPx, FTx, FUx, FYx, G3x, G7x, M2x • 7459-CTO, 68x, 69x, 6Bx, 6Cx, 6Gx, 6Kx, 6Lx, 6Px, 72x, H3x, H4x, H6x, H7x • 2023-CTO • 2024-CTO • 7462-CTO, 22x, 23x, 24x, 27x, 28x, 29x, 2Cx, 2Dx, 42x, 47x, 48x, 4Qx, 4Rx, 4Sx, 4Tx, 4Ux, 4Vx, 4Wx, 4Xx, 4Yx, F2x, F4x, F6x, F7x, FAx, FBx, FCx, FFx, FGx, FLx, FMx, FNx, FSx • 7465-CTO, 23x, 24x, 2Mx, 2Nx, 2Px, 2Qx, 2Rx, 2Sx, 2Tx, 2Ux, 2Vx, 2Wx, 2Xx, 2Zx, 3Lx, 3Nx, 3Px, 3Rx, 3Vx, 3Wx, 3Xx, D4x, DCx, DDx, DEx, DFx, G2x, G5x, G6x, G7x • 7466-CTO, 32x, 34x, 35x, 45x, 46x, 47x, 48x, 49x, 4Ax, 4Bx, 4Cx, 4Dx, 4Hx, 4Jx, 4Kx, 4Lx, 4Mx, 4Nx, 4Px, 4Qx, 4Sx, 4Vx, 58x, 59x, 5Ax, 5Kx, 5Lx, 5Mx, 5Nx, 5Rx, 5Vx, 5Wx, 5Zx, 9Fx, 9Gx, 9Hx, 9Jx, 9Kx, 9Rx, 9Xx, DLx, DMx, F9x, FAx, FNx, FPx, FQx, H5x, H6x, H7x • 7469-CTO, 52x, 53x, 58x, 59x, 5Ax, 5Bx, 5Cx, 5Dx, 5Ex, 5Fx, 5Sx, 62x, 63x, 64x, 65x, 66x, 67x, 68x, 7Lx, 7Xx, 8Ex, 8Vx, 8Wx, 8Xx, 8Yx, 97x, 9Bx, 9Cx, G2x, G6x, G7x, G8x • 7470-CTO, 5Gx, 5Hx, 62x, 63x, 65x, 68x, 6Ux, 72x, 76x, 8Ux • 2046-CTO • 2047-CTO • 3249-CTO, 24x, 25x, 27x, 2Cx, 2Kx, 2Lx, J2x, J5x, JAx	44C5393	N

Downloaded from LpManual.com Manuals

Table 38. Parts list—12.1-in. WXGA TFT (continued)

No.	FRU	FRU no.	CRU ID
	• 3323-CTO, 4Bx, 4Cx, 4Fx, 4Hx, 4Jx, 4Yx, 54x, 56x, 57x, 58x, 5Hx, 5Jx, 5Kx, 5Lx, 5Mx, 5Nx, 5Px, 5Rx, 5Sx, 5Tx, 5Ux, 5Vx, 5Wx, 5Yx, 5Zx, 62x, 63x, 64x, 65x, 66x, 67x, 68x, 69x, 6Ax, 6Bx, 6Cx, 6Dx, 6Ex, 6Fx, 6Gx, 6Hx, 6Jx, 6Kx, 6Lx, 6Mx, 6Nx, 6Px, 6Rx, 6Sx, 6Tx, 6Ux, 6Vx, 6Wx, 6Yx, 6Zx, 72x, 73x, 74x, 75x, 76x, 77x, 78x, 79x, 7Ax, 7Bx, 7Cx, 7Dx, 7Ex, 7Fx, 7Gx, 7Hx, 7Jx, 7Kx, 7Lx, 7Wx, 7Xx, 7Yx, 7Zx, 82x, 83x, 84x, 85x, 86x, 87x • 3357-CTO • 3626-CTO, F9x, FDx, FEx, FFx, FGx, FHx, FJx, FKx, FLx, FZx, G2x, G3x, G4x, GAx • 3680-CTO, F8x • 3712-CTO • 4492-CTO		
3	Wireless LAN/WAN antenna kit • 7454-CTO, 23x, 24x, 25x, 28x, 2Jx, 2Mx, 2Px, 2Sx, 2Tx, 2Ux, 2Vx, 2Zx, 32x, 33x, 34x, 36x, 38x, 3Hx, 3Jx, 3Kx, 3Qx, 3Rx, 3Sx, 3Tx, 3Vx, 3Wx, 3Xx, 93x, 96x, 9Bx, 9Cx, 9Gx, 9Hx, 9Jx, 9Lx, G2x, G3x, GBx, GCx, GDx, GEx, GHx, GJx, GKx, GNx, GPx • 7455-CTO, 33x, 34x, 35x, 3Ax, 3Bx, 3Dx, 3Ex, 3Lx, 3Mx, 3Nx, 3Px, 3Qx, 3Sx, 3Tx, 3Xx, 3Yx, 3Zx, 42x, 43x, 44x, 45x, 46x, 47x, 48x, 4Ax, 4Bx, 4Cx, 4Dx, 4Ex, 4Fx, 4Gx, 4Qx, 4Rx, 4Sx, 4Tx, 4Ux, 4Vx, 4Wx, 4Xx, 4Yx, 4Zx, 82x, 83x, 84x, 87x, 88x, 89x, 8Ax, 8Bx, 8Cx, 8Dx, 8Ex, 8Fx, 8Gx, 8Hx, 8Jx, 8Kx, 8Lx, 8Mx, 8Px, 8Qx, 8Rx, 8Sx, 8Tx, 8Ux, 8Vx, 8Wx, 8Xx, 8Yx, 8Zx, D2x, D3x, D7x, D8x, D9x, DBx, DFx, DJx, DKx, DLx, DNx, DPx, DQx, DRx, DUx, DVx, DWx, DYx, DZx, F2x, F3x, F4x, F5x, F6x, F7x, F9x, FBx, FCx, FDx, FEx, FFx, FGx, FHx, FJx, FKx, FLx, FMx, FNx, FPx, FQx, FRx, FSx, FTx, FUx, FVx, FWx, FXx, FYx, FZx, N2x, N5x, P2x, P3x, P4x, P5x, P6x, P7x, P9x, PAx, PBx, PCx, PDx, PEx, PFx, PGx, PHx, PJx • 7457-CTO, 43x, 44x, 47x, 49x, 4Bx, 4Ex, 4Fx, 4Jx, 4Kx, 4Lx, 4Mx, 4Rx, 4Sx, 4Tx, 4Wx, 53x, 54x, 56x, 57x, 58x • 7458-CTO, 26x, 28x, 2Bx, 2Cx, 2Dx, 2Ex, 2Fx, 2Kx, 2Lx, 2Mx, 2Nx, 2Px, 2Qx, 2Rx, 2Tx, 2Vx, 4Xx, 4Yx, 52x, 53x, 55x, 58x, 59x, 5Ax, 5Bx, 5Cx, 5Lx, 5Mx, 5Nx, 5Px, 5Qx, 5Rx, 5Sx, 5Tx, 62x, 63x, 65x, 66x, 67x, 68x, 6Ax, 6Bx, 6Cx, 6Dx, 6Ex, 6Jx, 6Kx, 6Lx, 6Mx, 6Nx, 6Px, 6Rx, 6Sx, 6Tx, 6Ux, 6Vx, 6Wx, 6Yx, 6Zx, 76x, 77x, 79x, 7Bx, 7Cx, 7Ex, 7Fx, 7Gx, 7Hx, 7Jx, 7Kx, 7Lx, 7Px, 7Qx, 7Rx, 7Tx, 7Ux, 7Vx, 7Xx, 7Yx, 7Zx, 82x, 83x, 84x, 85x, 86x, 87x, 8Ax, 8Fx, 8Gx, 8Hx, 8Kx, 8Lx, 8Mx, 8Nx, 8Sx, 8Wx, 8Xx, 8Zx, E2x, F5x, F6x, F7x, F8x, F9x, FAx, FCx, FEx, FFx, FGx, FKx, FLx, FMx, FQx, FSx, FVx, FWx, FXx, G4x, G5x, G6x, G8x, G9x, GBx, GCx, GDx, GEx, GFx, M3x, X4x • 7459-CTO, 5Ex, 5Fx, 62x, 63x, 64x, 65x, 66x, 67x, 6Ax, 6Dx, 6Ex, 6Fx, 6Jx, 6Mx, 6Nx, 6Qx, 6Rx, 6Sx, 6Tx, 6Ux, 6Vx, 6Wx, 6Xx, 6Yx, 6Zx, 73x, 74x, 75x, E3x, H2x, H5x, M2x, M3x, M4x • 2023-CTO • 2024-CTO • 7462-CTO, 25x, 26x, 2Ax, 2Bx, 2Ex, 2Fx, 2Gx, 2Hx, 43x, 44x, 45x, 46x, 4Bx, 4Gx, F3x, F5x, F8x, F9x, FDx, FEx, FHx, FJx, FKx, FRx, FUx, FVx • 7465-CTO, 2Lx, 3Jx, 3Sx, 3Tx, 3Ux, 3Yx, 3Zx, D6x, D8x, DAx, DBx, DJx, G3x, G4x, G8x, G9x, GAx, GBx • 7466-CTO, 33x, 38x, 39x, 3Px, 3Qx, 3Rx, 3Sx, 3Tx, 3Ux, 3Vx, 3Xx, 3Yx, 3Zx, 43x, 4Ex, 4Fx, 4Wx, 4Xx, 4Yx, 4Zx, 52x, 53x, 54x, 55x, 56x, 57x, 5Bx, 5Cx, 5Dx, 5Ex, 5Fx, 5Gx, 5Hx, 5Jx, 5Px, 5Qx, 5Sx, 5Tx, 5Ux, 5Xx, 5Yx, 92x, 93x, 95x, 96x, 97x, 98x, 99x, 9Ax, 9Bx, 9Cx, 9Dx, 9Ex, 9Lx, 9Mx, 9Nx, 9Qx, 9Sx, 9Tx, 9Ux, 9Wx, 9Yx, 9Zx, F2x, F3x, F4x, F5x, F6x, F7x, F8x, FBx, FCx, FDx, FEx, FFx, FGx, FHx, FJx, FKx, FLx, FMx, FRx, FSx, FTx, FUx, FVx, FWx, FXx, FYx, FZx, H2x, H4x, H8x, H9x, HAx, HBx, HCx, HDx, HEx, N2x • 7469-CTO, 55x, 56x, 57x, 5Gx, 5Hx, 5Jx, 5Kx, 5Tx, 5Yx, 5Zx, 6Bx, 6Cx, 6Dx, 6Ex, 6Fx, 6Gx, 6Hx, 6Jx, 6Kx, 6Lx, 6Mx, 6Nx, 6Px, 6Qx, 6Rx, 6Tx, 6Ux, 6Vx, 6Wx, 6Xx, 6Yx, 6Zx, 72x, 73x, 74x, 75x, 76x, 77x, 79x, 7Bx, 7Cx, 7Dx, 7Ex, 7Fx, 7Hx, 7Jx, 7Kx, 7Qx, 7Rx, 7Sx, 7Tx, 83x, 84x, 8Bx, 8Cx, 8Dx, 8Fx, 8Lx, 8Mx, 8Nx, 8Rx, 8Sx, 8Tx, 8Ux, 8Zx, 93x, 94x, 95x, 96x, 98x, 99x, 9Ax, 9Dx, 9Ex, 9Gx, E2x, G3x, G4x, G5x, G9x, GAx, GBx, GCx • 7470-CTO, 69x, 6Ax, 6Hx, 6Px, 6Rx, 6Sx, 6Tx, 6Vx, 73x, 74x, 75x, 77x, 8Tx, 8Zx, E2x • 2046-CTO • 2047-CTO(continued)	44C5395	N

Downloaded from LpManual.com Manuals

Table 38. Parts list—12.1-in. WXGA TFT (continued)

No.	FRU	FRU no.	CRU ID
3	(continued) Wireless LAN/WAN antenna kit • 3249-CTO, 22x, 23x, 26x, 28x, 29x, 2Ax, 2Bx, 2Dx, 2Ex, 2Fx, 2Gx, 2Hx, 2Jx, 2Lx, 2Mx, J3x, J4x, J6x, J7x, J8x, J9x • 3323-CTO, 42x, 43x, 44x, 45x, 46x, 48x, 49x, 4Ax, 4Dx, 4Ex, 4Gx, 4Kx, 4Lx, 4Mx, 4Nx, 4Px, 4Rx, 4Sx, 4Tx, 4Ux, 4Vx, 4Wx, 4Zx, 52x, 53x, 55x, 59x, 5Ax, 5Bx, 5Cx, 5Dx, 5Ex, 5Fx, 5Gx, 7Mx, 7Nx, 7Px, 7Rx, 7Sx, 7Tx, 7Ux, 7Vx, 88x, 89x, 8Ax, 8Bx, 8Cx, 8Dx, 8Ex, 8Fx, 8Gx, 8Jx, 8Kx, 8Lx, 8Nx, 8Px, 8Rx, 8Sx, 8Tx, 8Ux, 8Vx, 8Wx, 8Xx, 8Yx, 8Zx, 92x, 93x, 94x, 95x, 96x, 97x, 98x, 99x, 9Ax, 9Bx, 9Cx, 9Dx, 9Ex, 9Fx, 9Gx, 9Hx, K2x, K3x, K4x, K5x, K6x, K7x, K8x, K9x, KAx, KCx, KDx, KEx, KFx, KGx, KHx, KJx, KLx, KMx, KNx, KPx, KRx, KSx, KTx, KUx, KVx, KWx, KYx, KZx, L2x, L3x, L4x, L5x, L6x, L7x, L8x, LAx, LBx, LCx, LDx, LEx, LFx, R2x • 3357-CTO, D2x, D3x, D4x, D5x, D6x, D7x • 3626-CTO, 11x, F2x, F3x, F4x, F5x, F6x, F7x, F8x, FAx, FBx, FCx, FMx, FNx, FPx, FRx, FSx, FTx, FUx, FVx, FWx, FXx, FYx, G5x, G6x, G7x, G8x, G9x, GBx, GCx, GDx, GEx, GFx, GHx, GHx, GJx, GJx, GKx, GLx, GMx, GNx, GPx, GRx, GSx, GTx, GUx, GVx, GWx, GXx, GYx, GZx, H2x, H3x, H4x, H5x, H6x, H7x, R3x, N2x • 3680-CTO, 11x, F7x, F9x, FAx, FBx, P2x, P3x, P4x, P5x, P6x, P7x, P8x, P9x, PAx, PBx, PCx, PDx, PEx, PFx, PGx, PHx, PJx, N2x • 3712-CTO • 4492-CTO	44C5395	N
3	Wireless LAN/WAN/USB antenna kit • 7454-CTO, 22x, 27x, 2Kx, 2Lx, 9Fx • 7455-CTO, 32x • 7457-CTO, 42x, 46x • 7458-CTO, 5Fx, 5Hx, 5Jx, 7Dx, 89x, 8Ex, 8Rx, 8Tx, X5x • 7459-CTO • 2023-CTO • 2024-CTO • 7462-CTO, 49x, 4Ax, 4Cx, 4Dx, 4Ex, 4Fx, 4Hx • 7465-CTO, 25x, 26x, 28x, 29x, 2Dx, D7x, D9x, DGx, DHx, DKx • 7466-CTO, 9Px, 9Vx, H3x • 7469-CTO • 7470-CTO • 2046-CTO • 2047-CTO • 3249-CTO • 3323-CTO • 3357-CTO • 3626-CTO • 3680-CTO • 3712-CTO • 4492-CTO	44C5394	N
3	Wireless LAN/MIMO antenna kit	44C5393	N

Downloaded from LpManual.com Manuals

Table 38. Parts list—12.1-in. WXGA TFT (continued)

No.	FRU	FRU no.	CRU ID
4	Hinge L/R • 7454-all • 7455-all • 7457-all • 7458-all • 7459-all • 2023-CTO • 2024-CTO • 7462-CTO, 22x, 23x, 24x, 25x, 26x, 27x, 28x, 29x, 2Ax, 2Bx, 2Cx, 2Dx, 2Ex, 2Fx, 2Gx, 2Hx, 42x, 43x, 44x, 45x, 46x, 47x, 48x, 49x, 4Ax, 4Bx, 4Cx, 4Dx, 4Ex, 4Fx, 4Gx, 4Hx, 4Qx, 4Rx, 4Sx, 4Tx, 4Ux, 4Vx, 4Wx, 4Xx, 4Yx, F2x, F3x, F4x, F5x, F6x, F7x, F8x, F9x, FAx, FBx, FCx, FDx, FEx, FFx, FGx, FHx, FJx, FKx, FLx, FMx, FNx, FRx, FSx, FUx, FVx • 7465-CTO, 23x, 24x, 25x, 26x, 27x, 28x, 29x, 2Dx, 2Lx, 2Mx, 2Nx, 2Px, 2Qx, 2Rx, 2Sx, 2Tx, 2Ux, 2Vx, 2Wx, 2Xx, 2Zx, 3Jx, 3Lx, 3Nx, 3Px, 3Rx, 3Sx, 3Tx, 3Ux, 3Vx, 3Wx, 3Xx, 3Yx, 3Zx, D4x, D6x, D7x, D8x, D9x, DAx, DBx, DCx, DDx, DEx, DFx, DGx, DHx, DJx, DKx, G2x, G3x, G4x, G5x, G6x, G7x, G8x, G9x, GAx, GBx • 7466-CTO, 32x, 33x, 34x, 35x, 38x, 39x, 3Px, 3Qx, 3Rx, 3Sx, 3Tx, 3Ux, 3Vx, 3Xx, 3Yx, 3Zx, 43x, 45x, 46x, 47x, 48x, 49x, 4Ax, 4Bx, 4Cx, 4Dx, 4Ex, 4Fx, 4Hx, 4Jx, 4Kx, 4Lx, 4Mx, 4Nx, 4Px, 4Qx, 4Sx, 4Vx, 4Wx, 4Xx, 4Yx, 4Zx, 52x, 53x, 54x, 55x, 56x, 57x, 58x, 59x, 5Ax, 5Bx, 5Cx, 5Dx, 5Ex, 5Fx, 5Gx, 5Hx, 5Jx, 5Kx, 5Lx, 5Mx, 5Nx, 5Px, 5Qx, 5Rx, 5Sx, 5Tx, 5Ux, 5Vx, 5Wx, 5Xx, 5Yx, 5Zx, 92x, 93x, 95x, 96x, 97x, 98x, 99x, 9Ax, 9Bx, 9Cx, 9Dx, 9Ex, 9Fx, 9Gx, 9Hx, 9Jx, 9Kx, 9Lx, 9Mx, 9Nx, 9Px, 9Qx, 9Rx, 9Sx, 9Tx, 9Ux, 9Vx, 9Wx, 9Xx, 9Yx, 9Zx, DLx, DMx, F2x, F3x, F4x, F5x, F6x, F7x, F8x, F9x, FAx, FBx, FCx, FDx, FEx, FFx, FGx, FHx, FJx, FKx, FLx, FMx, FNx, FPx, FQx, FRx, FSx, FTx, FUx, FVx, FWx, FXx, FYx, FZx, H2x, H3x, H4x, H5x, H6x, H7x, H8x, H9x, HAx, HBx, HCx, HDx, HEx, N2x • 7469-CTO, 52x, 53x, 55x, 56x, 57x, 58x, 59x, 5Ax, 5Bx, 5Cx, 5Dx, 5Ex, 5Fx, 5Gx, 5Hx, 5Jx, 5Kx, 5Sx, 5Tx, 5Yx, 5Zx, 62x, 63x, 64x, 65x, 66x, 67x, 68x, 6Bx, 6Cx, 6Dx, 6Ex, 6Fx, 6Gx, 6Hx, 6Jx, 6Kx, 6Lx, 6Mx, 6Nx, 6Px, 6Qx, 6Rx, 6Tx, 6Ux, 6Vx, 6Wx, 6Xx, 6Yx, 6Zx, 72x, 73x, 74x, 75x, 76x, 77x, 79x, 7Bx, 7Cx, 7Dx, 7Ex, 7Fx, 7Hx, 7Jx, 7Kx, 7Lx, 7Qx, 7Rx, 7Sx, 7Tx, 7Xx, 83x, 84x, 8Bx, 8Cx, 8Dx, 8Ex, 8Fx, 8Lx, 8Mx, 8Nx, 8Rx, 8Sx, 8Tx, 8Ux, 8Vx, 8Wx, 8Xx, 8Yx, 8Zx, 93x, 94x, 95x, 96x, 97x, 98x, 99x, 9Ax, 9Bx, 9Cx, 9Dx, 9Ex, 9Gx, E2x, G2x, G3x, G4x, G5x, G6x, G7x, G8x, G9x, GAx, GBx, GCx • 7470-CTO, 5Gx, 5Hx, 62x, 63x, 65x, 68x, 69x, 6Ax, 6Hx, 6Px, 6Rx, 6Sx, 6Tx, 6Ux, 6Vx, 72x, 73x, 74x, 75x, 76x, 77x, 8Tx, 8Ux, 8Zx, E2x • 2046-CTO • 2047-CTO • 3249-all • 3323-all • 3357-all • 3626-all • 3680-all • 3712-all • 4492-all	44C9544	N
5	LCD rear cover assembly • 7454-all • 7455-all • 7457-all • 7458-all • 7459-all • 2023-CTO • 2024-CTO • 7462-CTO, 22x, 23x, 24x, 25x, 26x, 27x, 28x, 29x, 2Ax, 2Bx, 2Cx, 2Dx, 2Ex, 2Fx, 2Gx, 2Hx, 42x, 43x, 44x, 45x, 46x, 47x, 48x, 49x, 4Ax, 4Bx, 4Cx, 4Dx, 4Ex, 4Fx, 4Gx, 4Hx, 4Qx, 4Rx, 4Sx, 4Tx, 4Ux, 4Vx, 4Wx, 4Xx, 4Yx, F2x, F3x, F4x, F5x, F6x, F7x, F8x, F9x, FAx, FBx, FCx, FDx, FEx, FFx, FGx, FHx, FJx, FKx, FLx, FMx, FNx, FRx, FSx, FUx, FVx	44C9543	N

Downloaded from LpManual.com Manuals

Table 38. Parts list—12.1-in. WXGA TFT (continued)

No.	FRU	FRU no.	CRU ID
	• 7465-CTO, 23x, 24x, 25x, 26x, 27x, 28x, 29x, 2Dx, 2Lx, 2Mx, 2Nx, 2Px, 2Qx, 2Rx, 2Sx, 2Tx, 2Ux, 2Vx, 2Wx, 2Xx, 2Zx, 3Jx, 3Lx, 3Nx, 3Px, 3Rx, 3Sx, 3Tx, 3Ux, 3Vx, 3Wx, 3Xx, 3Yx, 3Zx, D4x, D6x, D7x, D8x, D9x, DAx, DBx, DCx, DDx, DEx, DFx, DGx, DHx, DJx, DKx, G2x, G3x, G4x, G5x, G6x, G7x, G8x, G9x, GAx, GBx • 7466-CTO, 32x, 33x, 34x, 35x, 38x, 39x, 3Px, 3Qx, 3Rx, 3Sx, 3Tx, 3Ux, 3Vx, 3Xx, 3Yx, 3Zx, 43x, 45x, 46x, 47x, 48x, 49x, 4Ax, 4Bx, 4Cx, 4Dx, 4Ex, 4Fx, 4Hx, 4Jx, 4Kx, 4Lx, 4Mx, 4Nx, 4Px, 4Qx, 4Sx, 4Vx, 4Wx, 4Xx, 4Yx, 4Zx, 52x, 53x, 54x, 55x, 56x, 57x, 58x, 59x, 5Ax, 5Bx, 5Cx, 5Dx, 5Ex, 5Fx, 5Gx, 5Hx, 5Jx, 5Kx, 5Lx, 5Mx, 5Nx, 5Px, 5Qx, 5Rx, 5Sx, 5Tx, 5Ux, 5Vx, 5Wx, 5Xx, 5Yx, 5Zx, 92x, 93x, 95x, 96x, 97x, 98x, 99x, 9Ax, 9Bx, 9Cx, 9Dx, 9Ex, 9Fx, 9Gx, 9Hx, 9Jx, 9Kx, 9Lx, 9Mx, 9Nx, 9Px, 9Qx, 9Rx, 9Sx, 9Tx, 9Ux, 9Vx, 9Wx, 9Xx, 9Yx, 9Zx, DLx, DMx, F2x, F3x, F4x, F5x, F6x, F7x, F8x, F9x, FAx, FBx, FCx, FDx, FEx, FFx, FGx, FHx, FJx, FKx, FLx, FMx, FNx, FPx, FQx, FRx, FSx, FTx, FUx, FVx, FWx, FXx, FYx, FZx, H2x, H3x, H4x, H5x, H6x, H7x, H8x, H9x, HAx, HBx, HCx, HDx, HEx, N2x • 7469-CTO, 52x, 53x, 55x, 56x, 57x, 58x, 59x, 5Ax, 5Bx, 5Cx, 5Dx, 5Ex, 5Fx, 5Gx, 5Hx, 5Jx, 5Kx, 5Sx, 5Tx, 5Yx, 5Zx, 62x, 63x, 64x, 65x, 66x, 67x, 68x, 6Bx, 6Cx, 6Dx, 6Ex, 6Fx, 6Gx, 6Hx, 6Jx, 6Kx, 6Lx, 6Mx, 6Nx, 6Px, 6Qx, 6Rx, 6Tx, 6Ux, 6Vx, 6Wx, 6Xx, 6Yx, 6Zx, 72x, 73x, 74x, 75x, 76x, 77x, 79x, 7Bx, 7Cx, 7Dx, 7Ex, 7Fx, 7Hx, 7Jx, 7Kx, 7Lx, 7Qx, 7Rx, 7Sx, 7Tx, 7Xx, 83x, 84x, 8Bx, 8Cx, 8Dx, 8Ex, 8Fx, 8Lx, 8Mx, 8Nx, 8Rx, 8Sx, 8Tx, 8Ux, 8Vx, 8Wx, 8Xx, 8Yx, 8Zx, 93x, 94x, 95x, 96x, 97x, 98x, 99x, 9Ax, 9Bx, 9Cx, 9Dx, 9Ex, 9Gx, E2x, G2x, G3x, G4x, G5x, G6x, G7x, G8x, G9x, GAx, GBx, GCx • 7470-CTO, 5Gx, 5Hx, 62x, 63x, 65x, 68x, 69x, 6Ax, 6Hx, 6Px, 6Rx, 6Sx, 6Tx, 6Ux, 6Vx, 72x, 73x, 74x, 75x, 76x, 77x, 8Tx, 8Ux, 8Zx, E2x • 2046-CTO • 2047-CTO		
5	LCD rear cover assembly for X201 and X201i	75Y4590	N
6	CCFL-backlight LCD cable assembly with Bluetooth connector, with camera connector • 7454-CTO, 22x, 23x, 24x, 25x, 26x, 27x, 28x, 29x, 2Gx, 2Hx, 2Jx, 2Kx, 2Lx, 2Mx, 2Nx, 2Px, 2Qx, 2Rx, 2Sx, 2Tx, 2Ux, 2Vx, 2Wx, 2Xx, 2Yx, 2Zx, 92x, 93x, 95x, 96x, 97x, 98x, 9Bx, 9Cx, 9Fx, 9Gx, 9Hx, 9Jx, 9Lx • 7455-CTO, 32x, 33x, 34x, 35x, 36x, 38x, 39x, 3Ax, 3Bx, 3Cx, 3Dx, 3Ex, 3Fx, 3Gx, 3Hx, 3Jx, 3Kx, 3Lx, 3Mx, 3Nx, 3Px, 3Qx, 3Rx, 3Sx, 3Tx, 3Ux, 3Vx, 3Wx, 3Xx, 3Yx, 3Zx, D2x, D3x, D5x, D6x, D7x, D8x, D9x, DAx, DBx, DCx, DDx, DEx, DFx, DGx, DHx, DJx, DKx, DLx, DMx, DNx, DPx, DQx, DRx, DSx, DTx, DUx, DVx, DWx, DXx, DYx, DZx, N2x, N3x, N4x, N5x • 7457-CTO, 42x, 43x, 44x, 45x, 46x, 47x, 48x, 49x, 4Ax, 4Bx, 4Cx, 4Dx, 4Ex, 4Fx, 4Gx, 4Hx, 4Jx, 4Kx, 4Lx, 4Mx, 4Nx, 4Px, 4Qx, 4Rx, 4Sx, 4Tx, 4Ux, 4Vx, 4Wx • 7458-CTO, 4Xx, 4Yx, 52x, 53x, 54x, 55x, 56x, 57x, 58x, 59x, 5Ax, 5Bx, 5Cx, 5Dx, 5Ex, 5Fx, 5Hx, 5Jx, 5Lx, 5Mx, 5Nx, 5Px, 5Qx, 5Rx, 5Sx, 5Tx, 69x, 72x, 73x, 74x, 76x, 77x, 78x, 79x, 7Bx, 7Cx, 7Dx, 7Ex, 7Fx, 7Gx, 7Hx, 7Jx, 7Kx, 7Lx, 7Mx, 7Nx, 7Px, 7Qx, 7Rx, 7Sx, 7Tx, 7Ux, 7Vx, 7Wx, 7Xx, 7Yx, 7Zx, 82x, 83x, 84x, 85x, 86x, 87x, 88x, 89x, 8Ax, 8Bx, 8Cx, 8Dx, 8Ex, 8Fx, 8Gx, 8Hx, 8Jx, 8Kx, 8Lx, 8Mx, 8Nx, 8Px, 8Qx, 8Rx, 8Sx, 8Tx, 8Wx, 8Xx, 8Yx, 8Zx, E2x, F2x, F3x, F4x, F5x, F6x, F7x, F8x, F9x, FAx, FCx, FDx, FEx, FFx, FGx, FHx, FJx, FKx, FLx, FMx, FNx, FPx, FQx, FSx, FTx, FUx, FVx, FWx, FXx, FYx, G3x, G4x, G5x, G6x, G7x, G8x, G9x, GBx, GCx, GDx, GEx, GFx, M2x, M3x, X4x, X5x • 7459-CTO, 5Ex, 5Fx, 62x, 63x, 64x, 65x, 66x, 67x, 68x, 69x, 6Ax, 6Bx, 6Cx, 6Dx, 6Ex, 6Fx, 6Gx, 6Jx, 6Kx, 6Lx, 6Mx, 6Nx, 6Px, 6Qx, 6Rx, 6Sx, 6Tx, 6Ux, 6Vx, 6Wx, 6Xx, 6Yx, 6Zx, E3x, H2x, H3x, H4x, H5x, H6x, H7x, M2x, M3x, M4x • 2023-CTO • 2024-CTO • 7462-CTO, 42x, 43x, 44x, 45x, 46x, 47x, 48x, 49x, 4Ax, 4Bx, 4Cx, 4Dx, 4Ex, 4Fx, 4Gx, 4Hx, 4Qx, 4Rx, 4Sx, 4Tx, 4Ux, 4Vx, 4Wx, 4Xx, 4Yx, F2x, F3x, F4x, F5x, F6x, F7x, F8x, F9x, FAx, FBx, FCx, FDx, FEx, FFx, FGx, FHx, FJx, FKx, FLx, FMx, FNx, FRx, FSx, FUx, FVx • 7465-CTO, 23x, 24x, 25x, 26x, 27x, 28x, 29x, 2Dx, 2Lx, 2Mx, 2Nx, 2Px, 2Qx, 2Rx, 2Sx, 2Tx, 2Ux, 2Vx, 2Wx, 2Xx, 2Zx, D4x, D6x, D7x, D8x, D9x, DAx, DBx, DCx, DDx, DEx, DFx, DGx, DHx, DJx, DKx • 7466-CTO, 32x, 33x, 34x, 35x, 38x, 39x, 3Px, 3Qx, 3Rx, 3Sx, 3Tx, 3Ux, 3Vx, 3Xx, 3Yx, 3Zx, 92x, 93x, 95x, 96x, 97x, 98x, 99x, 9Ax, 9Bx, 9Cx, 9Dx, 9Ex, 9Fx, 9Gx, 9Hx, 9Jx, 9Kx,	44C9909	N

Downloaded from LpManual.com Manuals

Table 38. Parts list—12.1-in. WXGA TFT (continued)

No.	FRU	FRU no.	CRU ID
	9Lx, 9Mx, 9Nx, 9Px, 9Qx, 9Rx, 9Sx, 9Tx, 9Ux, 9Vx, 9Wx, 9Xx, 9Yx, 9Zx, DLx, DMx, H2x, H3x, H4x, H5x, H6x, H7x, H8x, H9x, HAx, HBx, HCx, HDx, HEx • 7469-CTO, 52x, 53x, 55x, 56x, 57x, 58x, 59x, 5Ax, 5Bx, 5Cx, 5Dx, 5Ex, 5Fx, 5Gx, 5Hx, 5Jx, 5Kx, 5Sx, 5Tx, 5Yx, 5Zx, 72x, 73x, 74x, 75x, 76x, 77x, 79x, 7Bx, 7Cx, 7Dx, 7Ex, 7Fx, 7Hx, 7Jx, 7Kx, 7Lx, 7Qx, 7Rx, 7Sx, 7Tx, 7Xx, 83x, 84x, 8Bx, 8Cx, 8Dx, 8Ex, 8Fx, 8Lx, 8Mx, 8Nx, 8Rx, 8Sx, 8Tx, 8Ux, 8Vx, 8Wx, 8Xx, 8Yx, 8Zx, E2x, G2x, G3x, G4x, G5x, G6x, G7x, G8x, G9x, GAx, GBx, GCx • 7470-CTO, 5Gx, 5Hx, 62x, 63x, 65x, 68x, 69x, 6Ax, 6Hx, 6Px, 6Rx, 6Sx, 6Tx, 6Ux, 6Vx, 8Tx, 8Ux, 8Zx, E2x • 2046-CTO • 2047-CTO		
6	LED-backlight LCD cable assembly with Bluetooth connector, with camera connector • 7454-CTO, 32x, 33x, 34x, 36x, 38x, 3Hx, 3Jx, 3Kx, 3Lx, 3Mx, 3Nx, 3Px, 3Qx, 3Rx, 3Sx, 3Tx, 3Vx, 3Wx, 3Xx, 3Yx, 3Zx, G2x, G3x, G4x, G5x, G6x, G7x, G8x, G9x, GBx, GCx, GDx, GEx, GFx, GGx, GHx, GJx, GKx, GLx, GMx, GNx, GPx • 7455-CTO, 42x, 43x, 44x, 45x, 46x, 47x, 48x, 49x, 4Ax, 4Bx, 4Cx, 4Dx, 4Ex, 4Fx, 4Gx, 4Hx, 4Jx, 4Kx, 4Lx, 4Mx, 4Nx, 4Px, 4Qx, 4Rx, 4Sx, 4Tx, 4Ux, 4Vx, 4Wx, 4Xx, 4Yx, 4Zx, 82x, 83x, 84x, 85x, 86x, 87x, 88x, 89x, 8Ax, 8Bx, 8Cx, 8Dx, 8Ex, 8Fx, 8Gx, 8Hx, 8Jx, 8Kx, 8Lx, 8Mx, 8Nx, 8Px, 8Qx, 8Rx, 8Sx, 8Tx, 8Ux, 8Vx, 8Wx, 8Xx, 8Yx, 8Zx, F2x, F3x, F4x, F5x, F6x, F7x, F9x, FBx, FCx, FDx, FEx, FFx, FGx, FHx, FJx, FKx, FLx, FMx, FNx, FPx, FQx, FRx, FSx, FTx, FUx, FVx, FWx, FXx, FYx, FZx, P2x, P3x, P4x, P5x, P6x, P7x, P9x, PAx, PBx, PCx, PDx, PEx, PFx, PGx, PHx, PJx • 7457-CTO, 52x, 53x, 54x, 55x, 56x, 57x, 58x • 7458-CTO, 22x, 24x, 25x, 26x, 27x, 28x, 29x, 2Ax, 2Bx, 2Cx, 2Dx, 2Ex, 2Fx, 2Kx, 2Lx, 2Mx, 2Nx, 2Px, 2Qx, 2Rx, 2Sx, 2Tx, 2Vx, 62x, 63x, 64x, 65x, 66x, 67x, 68x, 6Ax, 6Bx, 6Cx, 6Dx, 6Ex, 6Jx, 6Kx, 6Lx, 6Mx, 6Nx, 6Px, 6Qx, 6Rx, 6Sx, 6Tx, 6Ux, 6Vx, 6Wx, 6Xx, 6Yx, 6Zx • 7459-CTO, 72x, 73x, 74x, 75x • 2023-CTO • 2024-CTO • 7462-CTO, 22x, 23x, 24x, 25x, 26x, 27x, 28x, 29x, 2Ax, 2Bx, 2Cx, 2Dx, 2Ex, 2Fx, 2Gx, 2Hx • 7465-CTO, 3Jx, 3Lx, 3Nx, 3Px, 3Rx, 3Sx, 3Tx, 3Ux, 3Vx, 3Wx, 3Xx, 3Yx, 3Zx, G2x, G3x, G4x, G5x, G6x, G7x, G8x, G9x, GAx, GBx • 7466-CTO, 43x, 45x, 46x, 47x, 48x, 49x, 4Ax, 4Bx, 4Cx, 4Dx, 4Ex, 4Fx, 4Hx, 4Jx, 4Kx, 4Lx, 4Mx, 4Nx, 4Px, 4Qx, 4Sx, 4Vx, 4Wx, 4Xx, 4Yx, 4Zx, 52x, 53x, 54x, 55x, 56x, 57x, 58x, 59x, 5Ax, 5Bx, 5Cx, 5Dx, 5Ex, 5Fx, 5Gx, 5Hx, 5Jx, 5Kx, 5Lx, 5Mx, 5Nx, 5Px, 5Qx, 5Rx, 5Sx, 5Tx, 5Ux, 5Vx, 5Wx, 5Xx, 5Yx, 5Zx, F2x, F3x, F4x, F5x, F6x, F7x, F8x, F9x, FAx, FBx, FCx, FDx, FEx, FFx, FGx, FHx, FJx, FKx, FLx, FMx, FNx, FPx, FQx, FRx, FSx, FTx, FUx, FVx, FWx, FXx, FYx, FZx, N2x • 7469-CTO, 62x, 63x, 64x, 65x, 66x, 67x, 68x, 6Bx, 6Cx, 6Dx, 6Ex, 6Fx, 6Gx, 6Hx, 6Jx, 6Kx, 6Lx, 6Mx, 6Nx, 6Px, 6Qx, 6Rx, 6Tx, 6Ux, 6Vx, 6Wx, 6Xx, 6Yx, 6Zx, 93x, 94x, 95x, 96x, 97x, 98x, 99x, 9Ax, 9Bx, 9Cx, 9Dx, 9Ex, 9Gx • 7470-CTO, 72x, 73x, 74x, 75x, 76x, 77x • 2046-CTO • 2047-CTO	44C9991	N

Downloaded from LpManual.com Manuals

Table 38. Parts list—12.1-in. WXGA TFT (continued)

No.	FRU	FRU no.	CRU ID
6	(continued) LED-backlight LCD cable assembly with Bluetooth connector, with camera connector • 3249-CTO, 22x, 23x, 24x, 25x, 26x, 27x, 28x, 29x, 2Ax, 2Bx, 2Cx, 2Dx, 2Ex, 2Fx, 2Gx, 2Hx, 2Jx, 2Kx, 2Lx, 2Lx, 2Mx, J2x, J3x, J4x, J5x, J6x, J7x, J8x, J9x, JAx • 3323-CTO, 42x, 43x, 44x, 45x, 46x, 48x, 49x, 4Ax, 4Bx, 4Cx, 4Dx, 4Ex, 4Fx, 4Gx, 4Hx, 4Jx, 4Kx, 4Lx, 4Mx, 4Nx, 4Px, 4Rx, 4Sx, 4Tx, 4Ux, 4Vx, 4Wx, 4Yx, 4Zx, 52x, 53x, 54x, 55x, 56x, 57x, 58x, 59x, 5Ax, 5Bx, 5Cx, 5Dx, 5Ex, 5Fx, 5Gx, 5Hx, 5Jx, 5Kx, 5Lx, 5Mx, 5Nx, 5Px, 5Rx, 5Sx, 5Tx, 5Ux, 5Vx, 5Wx, 5Yx, 5Zx, 62x, 63x, 64x, 65x, 66x, 67x, 68x, 69x, 6Ax, 6Bx, 6Cx, 6Dx, 6Ex, 6Fx, 6Gx, 6Hx, 6Jx, 6Kx, 6Lx, 6Mx, 6Nx, 6Px, 6Rx, 6Sx, 6Tx, 6Ux, 6Vx, 6Wx, 6Yx, 6Zx, 72x, 73x, 74x, 75x, 76x, 77x, 78x, 79x, 7Ax, 7Bx, 7Cx, 7Dx, 7Ex, 7Fx, 7Gx, 7Hx, 7Jx, 7Kx, 7Lx, 7Mx, 7Nx, 7Px, 7Rx, 7Sx, 7Tx, 7Ux, 7Vx, 7Wx, 7Xx, 7Yx, 7Zx, 82x, 83x, 84x, 85x, 86x, 87x, 88x, 89x, 8Ax, 8Bx, 8Cx, 8Dx, 8Ex, 8Fx, 8Gx, 8Jx, 8Kx, 8Lx, 8Nx, 8Px, 8Rx, 8Sx, 8Tx, 8Ux, 8Vx, 8Wx, 8Xx, 8Yx, 8Zx, 92x, 93x, 94x, 95x, 96x, 97x, 98x, 99x, 9Ax, 9Bx, 9Cx, 9Dx, 9Ex, 9Fx, 9Gx, 9Hx, K2x, K3x, K4x, K5x, K6x, K7x, K8x, K9x, KAx, KCx, KDx, KEx, KFx, KGx, KHx, KJx, KLx, KMx, KNx, KPx, KRx, KSx, KTx, KUx, KVx, KWx, KYx, KZx, L2x, L3x, L4x, L5x, L6x, L7x, L8x, LAx, LBx, LCx, LDx, LEx, LFx, R2x • 3357-CTO, D2x, D3x, D4x, D5x, D6x, D7x • 3626-CTO, 11x, F2x, F3x, F4x, F5x, F6x, F7x, F8x, F9x, FAx, FBx, FCx, FDx, FEx, FFx, FGx, FHx, FJx, FKx, FLx, FMx, FNx, FPx, FRx, FSx, FTx, FUx, FVx, FWx, FXx, FYx, FZx, G2x, G3x, G4x, G5x, G6x, G7x, G8x, G9x, GAx, GBx, GCx, GDx, GEx, GFx, GHx, GHx, GJx, GJx, GKx, GLx, GMx, GNx, GPx, GRx, GSx, GTx, GUx, GVx, GWx, GXx, GYx, GZx, H2x, H3x, H4x, H5x, H6x, H7x, R3x, N2x • 3680-CTO, 11x, F7x, F8x, F9x, FAx, FBx, P2x, P3x, P4x, P5x, P6x, P7x, P8x, P9x, PAx, PBx, PCx, PDx, PEx, PFx, PGx, PHx, PJx, N2x • 3712-CTO • 4492-CTO	44C9991	N
7	Integrated camera • 7454-CTO, 23x, 24x, 25x, 28x, 2Jx, 2Mx, 2Px, 2Sx, 2Tx, 2Ux, 2Vx, 2Zx, 34x, 36x, 38x, 3Hx, 3Jx, 3Kx, 3Qx, 3Rx, 3Sx, 3Tx, 3Vx, 3Wx, 3Xx, 93x, 96x, 9Bx, 9Cx, 9Gx, 9Hx, 9Jx, 9Lx, G2x, G3x, GBx, GCx, GDx, GEx, GHx, GJx, GNx, GPx • 7455-CTO, 33x, 34x, 35x, 3Ax, 3Bx, 3Dx, 3Ex, 3Lx, 3Mx, 3Nx, 3Px, 3Qx, 3Sx, 3Tx, 3Xx, 3Yx, 3Zx, 42x, 43x, 44x, 45x, 46x, 47x, 48x, 4Ax, 4Bx, 4Cx, 4Dx, 4Ex, 4Fx, 4Gx, 4Qx, 4Rx, 4Sx, 4Tx, 4Ux, 4Vx, 4Wx, 4Xx, 4Yx, 4Zx, 82x, 83x, 84x, 87x, 88x, 89x, 8Ax, 8Bx, 8Cx, 8Dx, 8Ex, 8Fx, 8Gx, 8Hx, 8Jx, 8Kx, 8Lx, 8Mx, 8Px, 8Qx, 8Rx, 8Tx, 8Ux, 8Vx, 8Wx, 8Xx, 8Yx, 8Zx, D2x, D3x, D7x, D8x, D9x, DBx, DFx, DJx, DKx, DLx, DNx, DPx, DQx, DRx, DUx, DVx, DWx, DYx, DZx, F2x, F3x, F4x, F5x, F6x, F7x, F9x, FBx, FCx, FDx, FEx, FFx, FGx, FHx, FJx, FKx, FLx, FMx, FNx, FPx, FQx, FRx, FSx, FTx, FUx, FVx, FWx, FXx, FYx, FZx, N2x, N5x, P2x, P3x, P4x, P5x, P6x, P7x, P9x, PAx, PBx, PCx, PDx, PEx, PFx, PGx, PHx, PJx • 7457-CTO, 43x, 44x, 47x, 49x, 4Bx, 4Ex, 4Fx, 4Jx, 4Kx, 4Lx, 4Mx, 4Rx, 4Sx, 4Tx, 4Wx, 53x, 54x, 56x, 57x, 58x • 7458-CTO, 26x, 28x, 2Bx, 2Cx, 2Dx, 2Ex, 2Fx, 2Kx, 2Lx, 2Mx, 2Nx, 2Px, 2Qx, 2Rx, 2Tx, 2Vx, 4Xx, 4Yx, 52x, 53x, 55x, 58x, 59x, 5Ax, 5Bx, 5Cx, 5Lx, 5Mx, 5Nx, 5Px, 5Qx, 5Rx, 5Sx, 5Tx, 62x, 63x, 65x, 66x, 67x, 68x, 6Ax, 6Bx, 6Cx, 6Dx, 6Ex, 6Jx, 6Kx, 6Lx, 6Mx, 6Nx, 6Px, 6Rx, 6Sx, 6Tx, 6Ux, 6Vx, 6Wx, 6Yx, 6Zx, 76x, 77x, 79x, 7Bx, 7Cx, 7Ex, 7Fx, 7Gx, 7Hx, 7Jx, 7Kx, 7Lx, 7Px, 7Qx, 7Rx, 7Tx, 7Ux, 7Vx, 7Xx, 7Yx, 7Zx, 82x, 83x, 84x, 85x, 86x, 87x, 8Ax, 8Fx, 8Gx, 8Hx, 8Kx, 8Lx, 8Mx, 8Nx, 8Sx, 8Wx, 8Xx, 8Zx, E2x, F5x, F6x, F7x, F8x, F9x, FAx, FCx, FEx, FFx, FGx, FKx, FLx, FMx, FQx, FSx, FVx, FWx, FXx, G4x, G5x, G6x, G8x, G9x, GBx, GCx, GDx, GEx, GFx, M3x, X4x • 7459-CTO, 5Ex, 5Fx, 62x, 63x, 64x, 65x, 66x, 67x, 6Ax, 6Dx, 6Ex, 6Fx, 6Jx, 6Mx, 6Nx, 6Qx, 6Rx, 6Sx, 6Tx, 6Ux, 6Vx, 6Wx, 6Xx, 6Yx, 6Zx, 73x, 74x, 75x, E3x, H2x, H5x, M2x, M3x, M4x • 2023-CTO • 2024-CTO • 7462-CTO, 25x, 26x, 2Ax, 2Bx, 2Ex, 2Fx, 2Gx, 2Hx, 43x, 44x, 45x, 46x, 4Bx, 4Gx, F3x, F5x, F8x, F9x, FDx, FEx, FHx, FJx, FKx, FRx, FUx, FVx	42W8015	N

Downloaded from LpManual.com Manuals

Table 38. Parts list—12.1-in. WXGA TFT (continued)

No.	FRU	FRU no.	CRU ID
	• 7465-CTO, 27x, 2Lx, 3Jx, 3Sx, 3Tx, 3Ux, 3Yx, 3Zx, D6x, D8x, DAx, DBx, DJx, G3x, G4x, G8x, G9x, GAx, GBx • 7466-CTO, 33x, 38x, 39x, 3Px, 3Qx, 3Rx, 3Sx, 3Tx, 3Ux, 3Vx, 3Xx, 3Yx, 3Zx, 43x, 4Ex, 4Fx, 4Wx, 4Xx, 4Yx, 4Zx, 52x, 53x, 54x, 55x, 56x, 57x, 5Bx, 5Cx, 5Dx, 5Ex, 5Fx, 5Gx, 5Hx, 5Jx, 5Px, 5Qx, 5Sx, 5Tx, 5Ux, 5Xx, 5Yx, 92x, 93x, 95x, 96x, 97x, 98x, 99x, 9Ax, 9Bx, 9Cx, 9Dx, 9Ex, 9Lx, 9Mx, 9Nx, 9Qx, 9Sx, 9Tx, 9Ux, 9Wx, 9Yx, 9Zx, F2x, F3x, F4x, F5x, F6x, F7x, F8x, FBx, FCx, FDx, FEx, FFx, FGx, FHx, FJx, FKx, FLx, FMx, FRx, FSx, FTx, FUx, FVx, FWx, FXx, FYx, FZx, H2x, H4x, H8x, H9x, HAx, HBx, HCx, HDx, HEx, N2x • 7469-CTO, 55x, 56x, 57x, 5Gx, 5Hx, 5Jx, 5Kx, 5Tx, 5Yx, 5Zx, 6Bx, 6Cx, 6Dx, 6Ex, 6Fx, 6Gx, 6Hx, 6Jx, 6Kx, 6Lx, 6Mx, 6Nx, 6Px, 6Qx, 6Rx, 6Tx, 6Ux, 6Vx, 6Wx, 6Xx, 6Yx, 6Zx, 72x, 73x, 74x, 75x, 76x, 77x, 79x, 7Bx, 7Cx, 7Dx, 7Ex, 7Fx, 7Hx, 7Jx, 7Kx, 7Qx, 7Rx, 7Sx, 7Tx, 83x, 84x, 8Bx, 8Cx, 8Dx, 8Fx, 8Lx, 8Mx, 8Nx, 8Rx, 8Sx, 8Tx, 8Ux, 8Zx, 93x, 94x, 95x, 96x, 98x, 99x, 9Ax, 9Dx, 9Ex, 9Gx, E2x, G3x, G4x, G5x, G9x, GAx, GBx, GCx • 7470-CTO, 69x, 6Ax, 6Hx, 6Px, 6Rx, 6Sx, 6Tx, 6Vx, 73x, 74x, 75x, 77x, 8Tx, 8Zx, E2x • 2046-CTO • 2047-CTO		
7	Integrated camera (Unit 2M) • 3249-CTO, 22x, 23x, 26x, 28x, 29x, 2Ax, 2Bx, 2Fx, 2Gx, 2Hx, 2Lx, J3x, J5x, J6x, J8x, 2Nx, J9x, JAx, 2Rx, 2Px, 2Tx, 2Ux, 2Vx, JFx, JGx, JLx, JMx, JNx, JPx, JQx, JRx, JSx, JTx, JUx, 32x, 3Rx, 33x, 3Sx, 34x, 3Tx, 36x, 3Vx, 37x, 3Wx, C2x, C3x, MRx, MSx, MTx, MXx, MYx, MZx, 2Wx, 39x, 3Ax, 3Bx, 3Cx, 3Fx, 3Gx, 3Hx, 3Jx, 3Kx, 3Lx, 3Mx, 3Nx, CDx, CEx, CFx, CGx, 3Xx, C8x, CKx, CHx, CMx, CNx, CPx, CRx, CSx, CTx, CUx, CJx, CLx, DFx, EPx, ESx, DCx, DDx, DEx, DGx, DHx, DJx, ENx, QBx, QL+ QM+ QN+ QR+ QC+ QD+ QA+ Q9+ 19x, 1Ax, 1Fx, 1Gx • 3323-CTO, 12x, 1Lx, 1Mx, 1Nx, 1Px, 1Rx, 1Sx, 1Tx, 1Ux, 1Vx, 1Wx, 1Xx, 1Yx, 1Zx, 3Q+ 3Zx, 43x, 44x, 45x, 46x, 48x, 4Kx, 4Lx, 4Mx, 4Nx, 4Px, 4Rx, 4Sx, 4Tx, 4Wx, 4Yx, 56x, 57x, 58x, 59x, 5Ax, 7Fx, 7Gx, 7Hx, 7Jx, 7Kx, 7Lx, 7Mx, 7Nx, 85x, 86x, 87x, 88x, 89x, 8Ax, 8Bx, 8Cx, 8Dx, 8Ex, 8Fx, 8Gx, 8Jx, 8Kx, 8Lx, 8Nx, 8Px, 8Rx, 8Sx, 8Tx, 8Ux, 8Vx, 8Wx, 8Xx, 8Yx, 8Zx, 92x, 93x, 94x, 95x, 96x, 97x, 98x, 99x, 9Ax, 9Bx, 9Cx, 9Dx, 9Ex, 9Fx, 9Gx, 9Hx, 9Sx, 9Tx, 9Ux, 9Vx, 9Wx, 9Yx, 9Zx, A2x, A3x, A4x, A5x, A6x, A7x, AAx, ABx, ACx, ADx, AEx, AFx, AGx, AHx, AJx, AKx, ALx, AMx, ANx, APx, ARx, ASx, ATx, AUx, AVx, AWx, AXx, AYx, AZx, B2x, B3x, B4x, B5x, B6x, B7x, B8x, BAx, BBx, BCx, BDx, BEx, BFx, BGx, BHx, BJx, BKx, BLx, BMx, BNx, BPx, BRx, BSx, BTx, BUx, BVx, BWx, BXx, BYx, BZx, C4x, C5x, C6x, C7x, C9x, CAx, CVx, CWx, CXx, CYx, CZx, D8x, D9x, DAx, DBx, DLx, DMx, DNx, DPx, DRx, DSx, DTx, DUx, DVx, DWx, DXx, DYx, DZx, E2x, E3x, E4x, E5x, E6x, E7x, E8x, E9x, EAx, EBx, EEx, EFx, EGx, EHx, EJx, EKx, ELx, EMx, ETx, EUx, EVx, EWx, EXx, EYx, JBx, JCx, JDx, JEx, JVx, JWx, K2x, K3x, K4x, K5x, K6x, K7x, K8x, K9x, KAx, KCx, KDx, KEx, KFx, KGx, KHx, KJx, KLx, KMx, KNx, KPx, KRx, KSx, KTx, KUx, KVx, KWx, KYx, KZx, L2x, L3x, L4x, L5x, L6x, L7x, L8x, LAx, LBx, LCx, LDx, LEx, LFx, LHx, LJx, LKx, LLx, LUx, LVx, LWx, LXx, LYx, LZx, M2x, M3x, M4x, M5x, M6x, M7x, M8x, M9x, MAx, MBx, MEx, MFx, N2x, N3x, N4x, N5x, N6x, N7x, N8x, N9x, NAx, NEx, NFx, NGx, NHx, NJx, NKx, NLx, NNx, NPx, NWx, NXx, NYx, NZx, PMx, PNx, PPx, PRx, PSx, PTx, PUx, QE+ QU+ QVx, QWx, QXx, QYx, QZ+ R2x, RAx, RBx, RCx, RDx, REx, RFx, RGx, RHx, RJx, RKx, RLx, RNx, RPx, RRx, RSx • 3357-CTO, 3Px, D2x, D3x, D4x, D5x, D6x, D7x, LMx, LNx • 3626-CTO, 13x, 15x, 16x, 17x, 18x, 19x, 1Kx, F5x, F6x, FAx, FBx, FLx, FMx, FNx, FPx, FRx, FSx, FTx, G4x, G5x, G6x, G7x, G8x, GAx, GBx, GCx, GDx, GEx, GHx, GJx, GMx, GNx, GPx, GRx, GUx, GVx, GWx, GYx, GZx, H2x, H3x, H4x, H6x, H7x, H8x, H8x, H9x, H9x, HAx, HBx, HCx, HDx, HEx, HFx, HGx, HHx, HJx, HKx, HLx, HMx, HUx, HWx, HXx, Hyx, HZx, PWx, PXx, PYx, PZx, Q2x, Q3x, Q4x, Q5x, QG+ QH+ QJ+ QK+ QSx, QTx, R4x, R4x, R5x, R5x, R6x, R6x, R7x, R8x, R9x, RMx, RTx, RUx, RVx, RWx, RXx, N2x • 3680-CTO, FAx, FBx, H8x, H9x, HAx, HBx, HCx, HNx, HPx, HQx, HRx, HSx, HTx, P2x, P3x, P4x, P5x, P6x, PJx, P7x, P9x, PBx, PCx, PDx, PEx, PFx, PGx, PKx, Q6x, Q7x, N2x • 3712-CTO • 4492-CTO	45N2795	N

Downloaded from LpManual.com Manuals

Table 38. Parts list—12.1-in. WXGA TFT (continued)

No.	FRU	FRU no.	CRU ID
8	Inverter card • 7454-CTO, 22x, 23x, 24x, 25x, 26x, 27x, 28x, 29x, 2Gx, 2Hx, 2Jx, 2Kx, 2Lx, 2Mx, 2Nx, 2Px, 2Qx, 2Rx, 2Sx, 2Tx, 2Ux, 2Vx, 2Wx, 2Xx, 2Yx, 2Zx, 92x, 93x, 95x, 96x, 97x, 98x, 9Bx, 9Cx, 9Fx, 9Gx, 9Hx, 9Jx, 9Lx • 7455-CTO, 32x, 33x, 34x, 35x, 36x, 38x, 39x, 3Ax, 3Bx, 3Cx, 3Dx, 3Ex, 3Fx, 3Gx, 3Hx, 3Jx, 3Kx, 3Lx, 3Mx, 3Nx, 3Px, 3Qx, 3Rx, 3Sx, 3Tx, 3Ux, 3Vx, 3Wx, 3Xx, 3Yx, 3Zx, D2x, D3x, D5x, D6x, D7x, D8x, D9x, DAx, DBx, DCx, DDx, DEx, DFx, DGx, DHx, DJx, DKx, DLx, DMx, DNx, DPx, DQx, DRx, DSx, DTx, DUx, DVx, DWx, DXx, DYx, DZx, N2x, N3x, N4x, N5x • 7457-CTO, 42x, 43x, 44x, 45x, 46x, 47x, 48x, 49x, 4Ax, 4Bx, 4Cx, 4Dx, 4Ex, 4Fx, 4Gx, 4Hx, 4Jx, 4Kx, 4Lx, 4Mx, 4Nx, 4Px, 4Qx, 4Rx, 4Sx, 4Tx, 4Ux, 4Vx, 4Wx • 7458-CTO, 4Xx, 4Yx, 52x, 53x, 54x, 55x, 56x, 57x, 58x, 59x, 5Ax, 5Bx, 5Cx, 5Dx, 5Ex, 5Fx, 5Hx, 5Jx, 5Lx, 5Mx, 5Nx, 5Px, 5Qx, 5Rx, 5Sx, 5Tx, 69x, 72x, 73x, 74x, 76x, 77x, 78x, 79x, 7Bx, 7Cx, 7Dx, 7Ex, 7Fx, 7Gx, 7Hx, 7Jx, 7Kx, 7Lx, 7Mx, 7Nx, 7Px, 7Qx, 7Rx, 7Sx, 7Tx, 7Ux, 7Vx, 7Wx, 7Xx, 7Yx, 7Zx, 82x, 83x, 84x, 85x, 86x, 87x, 88x, 89x, 8Ax, 8Bx, 8Cx, 8Dx, 8Ex, 8Fx, 8Gx, 8Hx, 8Jx, 8Kx, 8Lx, 8Mx, 8Nx, 8Px, 8Qx, 8Rx, 8Sx, 8Tx, 8Wx, 8Xx, 8Yx, 8Zx, E2x, F2x, F3x, F4x, F5x, F6x, F7x, F8x, F9x, FAx, FCx, FDx, FEx, FFx, FGx, FHx, FJx, FKx, FLx, FMx, FNx, FPx, FQx, FSx, FTx, FUx, FVx, FWx, FXx, FYx, G3x, G4x, G5x, G6x, G7x, G8x, G9x, GBx, GCx, GDx, GEx, GFx, M2x, M3x, X4x, X5x • 7459-CTO, 5Ex, 5Fx, 62x, 63x, 64x, 65x, 66x, 67x, 68x, 69x, 6Ax, 6Bx, 6Cx, 6Dx, 6Ex, 6Fx, 6Gx, 6Jx, 6Kx, 6Lx, 6Mx, 6Nx, 6Px, 6Qx, 6Rx, 6Sx, 6Tx, 6Ux, 6Vx, 6Wx, 6Xx, 6Yx, 6Zx, E3x, H2x, H3x, H4x, H5x, H6x, H7x, M2x, M3x, M4x • 2023-CTO • 2024-CTO • 7462-CTO, 42x, 43x, 44x, 45x, 46x, 47x, 48x, 49x, 4Ax, 4Bx, 4Cx, 4Dx, 4Ex, 4Fx, 4Gx, 4Hx, 4Qx, 4Rx, 4Sx, 4Tx, 4Ux, 4Vx, 4Wx, 4Xx, 4Yx, F2x, F3x, F4x, F5x, F6x, F7x, F8x, F9x, FAx, FBx, FCx, FDx, FEx, FFx, FGx, FHx, FJx, FKx, FLx, FMx, FNx, FRx, FSx, FUx, FVx • 7465-CTO, 23x, 24x, 25x, 26x, 27x, 28x, 29x, 2Dx, 2Lx, 2Mx, 2Nx, 2Px, 2Qx, 2Rx, 2Sx, 2Tx, 2Ux, 2Vx, 2Wx, 2Xx, 2Zx, D4x, D6x, D7x, D8x, D9x, DAx, DBx, DCx, DDx, DEx, DFx, DGx, DHx, DJx, DKx • 7466-CTO, 32x, 33x, 34x, 35x, 38x, 39x, 3Px, 3Qx, 3Rx, 3Sx, 3Tx, 3Ux, 3Vx, 3Xx, 3Yx, 3Zx, 92x, 93x, 95x, 96x, 97x, 98x, 99x, 9Ax, 9Bx, 9Cx, 9Dx, 9Ex, 9Fx, 9Gx, 9Hx, 9Jx, 9Kx, 9Lx, 9Mx, 9Nx, 9Px, 9Qx, 9Rx, 9Sx, 9Tx, 9Ux, 9Vx, 9Wx, 9Xx, 9Yx, 9Zx, DLx, DMx, H2x, H3x, H4x, H5x, H6x, H7x, H8x, H9x, HAx, HBx, HCx, HDx, HEx • 7469-CTO, 52x, 53x, 55x, 56x, 57x, 58x, 59x, 5Ax, 5Bx, 5Cx, 5Dx, 5Ex, 5Fx, 5Gx, 5Hx, 5Jx, 5Kx, 5Sx, 5Tx, 5Yx, 5Zx, 72x, 73x, 74x, 75x, 76x, 77x, 79x, 7Bx, 7Cx, 7Dx, 7Ex, 7Fx, 7Hx, 7Jx, 7Kx, 7Lx, 7Qx, 7Rx, 7Sx, 7Tx, 7Xx, 83x, 84x, 8Bx, 8Cx, 8Dx, 8Ex, 8Fx, 8Lx, 8Mx, 8Nx, 8Rx, 8Sx, 8Tx, 8Ux, 8Vx, 8Wx, 8Xx, 8Yx, 8Zx, E2x, G2x, G3x, G4x, G5x, G6x, G7x, G8x, G9x, GAx, GBx, GCx • 7470-CTO, 5Gx, 5Hx, 62x, 63x, 65x, 68x, 69x, 6Ax, 6Hx, 6Px, 6Rx, 6Sx, 6Tx, 6Ux, 6Vx, 8Tx, 8Ux, 8Zx, E2x • 2046-CTO • 2047-CTO	42W8009	N
8	Inverter card • 7454-CTO, 22x, 23x, 24x, 25x, 26x, 27x, 28x, 29x, 2Gx, 2Hx, 2Jx, 2Kx, 2Lx, 2Mx, 2Nx, 2Px, 2Qx, 2Rx, 2Sx, 2Tx, 2Ux, 2Vx, 2Wx, 2Xx, 2Yx, 2Zx, 92x, 93x, 95x, 96x, 97x, 98x, 9Bx, 9Cx, 9Fx, 9Gx, 9Hx, 9Jx, 9Lx • 7455-CTO, 32x, 33x, 34x, 35x, 36x, 38x, 39x, 3Ax, 3Bx, 3Cx, 3Dx, 3Ex, 3Fx, 3Gx, 3Hx, 3Jx, 3Kx, 3Lx, 3Mx, 3Nx, 3Px, 3Qx, 3Rx, 3Sx, 3Tx, 3Ux, 3Vx, 3Wx, 3Xx, 3Yx, 3Zx, D2x, D3x, D5x, D6x, D7x, D8x, D9x, DAx, DBx, DCx, DDx, DEx, DFx, DGx, DHx, DJx, DKx, DLx, DMx, DNx, DPx, DQx, DRx, DSx, DTx, DUx, DVx, DWx, DXx, DYx, DZx, N2x, N3x, N4x, N5x • 7457-CTO, 42x, 43x, 44x, 45x, 46x, 47x, 48x, 49x, 4Ax, 4Bx, 4Cx, 4Dx, 4Ex, 4Fx, 4Gx, 4Hx, 4Jx, 4Kx, 4Lx, 4Mx, 4Nx, 4Px, 4Qx, 4Rx, 4Sx, 4Tx, 4Ux, 4Vx, 4Wx • 7458-CTO, 4Xx, 4Yx, 52x, 53x, 54x, 55x, 56x, 57x, 58x, 59x, 5Ax, 5Bx, 5Cx, 5Dx, 5Ex, 5Fx, 5Hx, 5Jx, 5Lx, 5Mx, 5Nx, 5Px, 5Qx, 5Rx, 5Sx, 5Tx, 69x, 72x, 73x, 74x, 76x, 77x, 78x, 79x, 7Bx, 7Cx, 7Dx, 7Ex, 7Fx, 7Gx, 7Hx, 7Jx, 7Kx, 7Lx, 7Mx, 7Nx, 7Px, 7Qx, 7Rx, 7Sx, 7Tx, 7Ux, 7Vx, 7Wx, 7Xx, 7Yx, 7Zx, 82x, 83x, 84x, 85x, 86x, 87x, 88x, 89x, 8Ax, 8Bx, 8Cx, 8Dx, 8Ex, 8Fx, 8Gx, 8Hx, 8Jx, 8Kx, 8Lx, 8Mx, 8Nx, 8Px, 8Qx, 8Rx, 8Sx, 8Tx, 8Wx, 8Xx, 8Yx,	42W8010	N

Downloaded from LpManual.com Manuals

Table 38. Parts list—12.1-in. WXGA TFT (continued)

No.	FRU	FRU no.	CRU ID
	8Zx, E2x, F2x, F3x, F4x, F5x, F6x, F7x, F8x, F9x, FAx, FCx, FDx, FEx, FFx, FGx, FHx, FJx, FKx, FLx, FMx, FNx, FPx, FQx, FSx, FTx, FUx, FVx, FWx, FXx, FYx, G3x, G4x, G5x, G6x, G7x, G8x, G9x, GBx, GCx, GDx, GEx, GFx, M2x, M3x, X4x, X5x • 7459-CTO, 5Ex, 5Fx, 62x, 63x, 64x, 65x, 66x, 67x, 68x, 69x, 6Ax, 6Bx, 6Cx, 6Dx, 6Ex, 6Fx, 6Gx, 6Jx, 6Kx, 6Lx, 6Mx, 6Nx, 6Px, 6Qx, 6Rx, 6Sx, 6Tx, 6Ux, 6Vx, 6Wx, 6Xx, 6Yx, 6Zx, E3x, H2x, H3x, H4x, H5x, H6x, H7x, M2x, M3x, M4x • 2023-CTO • 2024-CTO • 7462-CTO, 42x, 43x, 44x, 45x, 46x, 47x, 48x, 49x, 4Ax, 4Bx, 4Cx, 4Dx, 4Ex, 4Fx, 4Gx, 4Hx, 4Qx, 4Rx, 4Sx, 4Tx, 4Ux, 4Vx, 4Wx, 4Xx, 4Yx, F2x, F3x, F4x, F5x, F6x, F7x, F8x, F9x, FAx, FBx, FCx, FDx, FEx, FFx, FGx, FHx, FJx, FKx, FLx, FMx, FNx, FRx, FSx, FUx, FVx • 7465-CTO, 23x, 24x, 25x, 26x, 27x, 28x, 29x, 2Dx, 2Lx, 2Mx, 2Nx, 2Px, 2Qx, 2Rx, 2Sx, 2Tx, 2Ux, 2Vx, 2Wx, 2Xx, 2Zx, D4x, D6x, D7x, D8x, D9x, DAx, DBx, DCx, DDx, DEx, DFx, DGx, DHx, DJx, DKx • 7466-CTO, 32x, 33x, 34x, 35x, 38x, 39x, 3Px, 3Qx, 3Rx, 3Sx, 3Tx, 3Ux, 3Vx, 3Xx, 3Yx, 3Zx, 92x, 93x, 95x, 96x, 97x, 98x, 99x, 9Ax, 9Bx, 9Cx, 9Dx, 9Ex, 9Fx, 9Gx, 9Hx, 9Jx, 9Kx, 9Lx, 9Mx, 9Nx, 9Px, 9Qx, 9Rx, 9Sx, 9Tx, 9Ux, 9Vx, 9Wx, 9Xx, 9Yx, 9Zx, DLx, DMx, H2x, H3x, H4x, H5x, H6x, H7x, H8x, H9x, HAx, HBx, HCx, HDx, HEx • 7469-CTO, 52x, 53x, 55x, 56x, 57x, 58x, 59x, 5Ax, 5Bx, 5Cx, 5Dx, 5Ex, 5Fx, 5Gx, 5Hx, 5Jx, 5Kx, 5Sx, 5Tx, 5Yx, 5Zx, 72x, 73x, 74x, 75x, 76x, 77x, 79x, 7Bx, 7Cx, 7Dx, 7Ex, 7Fx, 7Hx, 7Jx, 7Kx, 7Lx, 7Qx, 7Rx, 7Sx, 7Tx, 7Xx, 83x, 84x, 8Bx, 8Cx, 8Dx, 8Ex, 8Fx, 8Lx, 8Mx, 8Nx, 8Rx, 8Sx, 8Tx, 8Ux, 8Vx, 8Wx, 8Xx, 8Yx, 8Zx, E2x, G2x, G3x, G4x, G5x, G6x, G7x, G8x, G9x, GAx, GBx, GCx • 7470-CTO, 5Gx, 5Hx, 62x, 63x, 65x, 68x, 69x, 6Ax, 6Hx, 6Px, 6Rx, 6Sx, 6Tx, 6Ux, 6Vx, 8Tx, 8Ux, 8Zx, E2x • 2046-CTO • 2047-CTO		
8	LED board • 7454-CTO, 32x, 33x, 34x, 36x, 38x, 3Hx, 3Jx, 3Kx, 3Lx, 3Mx, 3Nx, 3Px, 3Qx, 3Rx, 3Sx, 3Tx, 3Vx, 3Wx, 3Xx, 3Yx, 3Zx, G2x, G3x, G4x, G5x, G6x, G7x, G8x, G9x, GBx, GCx, GDx, GEx, GFx, GGx, GHx, GJx, GKx, GLx, GMx, GNx, GPx • 7455-CTO, 42x, 43x, 44x, 45x, 46x, 47x, 48x, 49x, 4Ax, 4Bx, 4Cx, 4Dx, 4Ex, 4Fx, 4Gx, 4Hx, 4Jx, 4Kx, 4Lx, 4Mx, 4Nx, 4Px, 4Qx, 4Rx, 4Sx, 4Tx, 4Ux, 4Vx, 4Wx, 4Xx, 4Yx, 4Zx, 82x, 83x, 84x, 85x, 86x, 87x, 88x, 89x, 8Ax, 8Bx, 8Cx, 8Dx, 8Ex, 8Fx, 8Gx, 8Hx, 8Jx, 8Kx, 8Lx, 8Mx, 8Nx, 8Px, 8Qx, 8Rx, 8Sx, 8Tx, 8Ux, 8Vx, 8Wx, 8Xx, 8Yx, 8Zx, F2x, F3x, F4x, F5x, F6x, F7x, F9x, FBx, FCx, FDx, FEx, FFx, FGx, FHx, FJx, FKx, FLx, FMx, FNx, FPx, FQx, FRx, FSx, FTx, FUx, FVx, FWx, FXx, FYx, FZx, P2x, P3x, P4x, P5x, P6x, P7x, P9x, PAx, PBx, PCx, PDx, PEx, PFx, PGx, PHx, PJx • 7457-CTO, 52x, 53x, 54x, 55x, 56x, 57x, 58x • 7458-CTO, 22x, 24x, 25x, 26x, 27x, 28x, 29x, 2Ax, 2Bx, 2Cx, 2Dx, 2Ex, 2Fx, 2Kx, 2Lx, 2Mx, 2Nx, 2Px, 2Qx, 2Rx, 2Sx, 2Tx, 2Vx, 62x, 63x, 64x, 65x, 66x, 67x, 68x, 6Ax, 6Bx, 6Cx, 6Dx, 6Ex, 6Jx, 6Kx, 6Lx, 6Mx, 6Nx, 6Px, 6Qx, 6Rx, 6Sx, 6Tx, 6Ux, 6Vx, 6Wx, 6Xx, 6Yx, 6Zx • 7459-CTO, 72x, 73x, 74x, 75x • 2023-CTO • 2024-CTO • 7462-CTO, 22x, 23x, 24x, 25x, 26x, 27x, 28x, 29x, 2Ax, 2Bx, 2Cx, 2Dx, 2Ex, 2Fx, 2Gx, 2Hx • 7465-CTO, 3Jx, 3Lx, 3Nx, 3Px, 3Rx, 3Sx, 3Tx, 3Ux, 3Vx, 3Wx, 3Xx, 3Yx, 3Zx, G2x, G3x, G4x, G5x, G6x, G7x, G8x, G9x, GAx, GBx • 7466-CTO, 43x, 45x, 46x, 47x, 48x, 49x, 4Ax, 4Bx, 4Cx, 4Dx, 4Ex, 4Fx, 4Hx, 4Jx, 4Kx, 4Lx, 4Mx, 4Nx, 4Px, 4Qx, 4Sx, 4Vx, 4Wx, 4Xx, 4Yx, 4Zx, 52x, 53x, 54x, 55x, 56x, 57x, 58x, 59x, 5Ax, 5Bx, 5Cx, 5Dx, 5Ex, 5Fx, 5Gx, 5Hx, 5Jx, 5Kx, 5Lx, 5Mx, 5Nx, 5Px, 5Qx, 5Rx, 5Sx, 5Tx, 5Ux, 5Vx, 5Wx, 5Xx, 5Yx, 5Zx, F2x, F3x, F4x, F5x, F6x, F7x, F8x, F9x, FAx, FBx, FCx, FDx, FEx, FFx, FGx, FHx, FJx, FKx, FLx, FMx, FNx, FPx, FQx, FRx, FSx, FTx, FUx, FVx, FWx, FXx, FYx, FZx, N2x • 7469-CTO, 62x, 63x, 64x, 65x, 66x, 67x, 68x, 6Bx, 6Cx, 6Dx, 6Ex, 6Fx, 6Gx, 6Hx, 6Jx, 6Kx, 6Lx, 6Mx, 6Nx, 6Px, 6Qx, 6Rx, 6Tx, 6Ux, 6Vx, 6Wx, 6Xx, 6Yx, 6Zx, 93x, 94x, 95x, 96x, 97x, 98x, 99x, 9Ax, 9Bx, 9Cx, 9Dx, 9Ex, 9Gx	45M2812	N

Downloaded from LpManual.com Manuals

Table 38. Parts list—12.1-in. WXGA TFT (continued)

No.	FRU	FRU no.	CRU ID
	• 7470-CTO, 72x, 73x, 74x, 75x, 76x, 77x • 2046-CTO • 2047-CTO		
8	(continued) LED board • 3249-CTO, 22x, 23x, 24x, 25x, 26x, 27x, 28x, 29x, 2Ax, 2Bx, 2Cx, 2Dx, 2Ex, 2Fx, 2Gx, 2Hx, 2Jx, 2Kx, 2Lx, 2Lx, 2Mx, J2x, J3x, J4x, J5x, J6x, J7x, J8x, J9x, JAx • 3323-CTO, 42x, 43x, 44x, 45x, 46x, 48x, 49x, 4Ax, 4Bx, 4Cx, 4Dx, 4Ex, 4Fx, 4Gx, 4Hx, 4Jx, 4Kx, 4Lx, 4Mx, 4Nx, 4Px, 4Rx, 4Sx, 4Tx, 4Ux, 4Vx, 4Wx, 4Yx, 4Zx, 52x, 53x, 54x, 55x, 56x, 57x, 58x, 59x, 5Ax, 5Bx, 5Cx, 5Dx, 5Ex, 5Fx, 5Gx, 5Hx, 5Jx, 5Kx, 5Lx, 5Mx, 5Nx, 5Px, 5Rx, 5Sx, 5Tx, 5Ux, 5Vx, 5Wx, 5Yx, 5Zx, 62x, 63x, 64x, 65x, 66x, 67x, 68x, 69x, 6Ax, 6Bx, 6Cx, 6Dx, 6Ex, 6Fx, 6Gx, 6Hx, 6Jx, 6Kx, 6Lx, 6Mx, 6Nx, 6Px, 6Rx, 6Sx, 6Tx, 6Ux, 6Vx, 6Wx, 6Yx, 6Zx, 72x, 73x, 74x, 75x, 76x, 77x, 78x, 79x, 7Ax, 7Bx, 7Cx, 7Dx, 7Ex, 7Fx, 7Gx, 7Hx, 7Jx, 7Kx, 7Lx, 7Mx, 7Nx, 7Px, 7Rx, 7Sx, 7Tx, 7Ux, 7Vx, 7Wx, 7Xx, 7Yx, 7Zx, 82x, 83x, 84x, 85x, 86x, 87x, 88x, 89x, 8Ax, 8Bx, 8Cx, 8Dx, 8Ex, 8Fx, 8Gx, 8Jx, 8Kx, 8Lx, 8Nx, 8Px, 8Rx, 8Sx, 8Tx, 8Ux, 8Vx, 8Wx, 8Xx, 8Yx, 8Zx, 92x, 93x, 94x, 95x, 96x, 97x, 98x, 99x, 9Ax, 9Bx, 9Cx, 9Dx, 9Ex, 9Fx, 9Gx, 9Hx, K2x, K3x, K4x, K5x, K6x, K7x, K8x, K9x, KAx, KCx, KDx, KEx, KFx, KGx, KHx, KJx, KLx, KMx, KNx, KPx, KRx, KSx, KTx, KUx, KVx, KWx, KYx, KZx, L2x, L3x, L4x, L5x, L6x, L7x, L8x, LAx, LBx, LCx, LDx, LEx, LFx, R2x • 3357-CTO, D2x, D3x, D4x, D5x, D6x, D7x • 3626-CTO, 11x, F2x, F3x, F4x, F5x, F6x, F7x, F8x, F9x, FAx, FBx, FCx, FDx, FEx, FFx, FGx, FHx, FJx, FKx, FLx, FMx, FNx, FPx, FRx, FSx, FTx, FUx, FVx, FWx, FXx, FYx, FZx, G2x, G3x, G4x, G5x, G6x, G7x, G8x, G9x, GAx, GBx, GCx, GDx, GEx, GFx, GHx, GHx, GJx, GJx, GKx, GLx, GMx, GNx, GPx, GRx, GSx, GTx, GUx, GVx, GWx, GXx, GYx, GZx, H2x, H3x, H4x, H5x, H6x, H7x, R3x, N2x • 3680-CTO, 11x, F7x, F8x, F9x, FAx, FBx, P2x, P3x, P4x, P5x, P6x, P7x, P8x, P9x, PAx, PBx, PCx, PDx, PEx, PFx, PGx, PHx, PJx, N2x • 3712-CTO • 4492-CTO	45M2812	N
8	LED board without microphone	04W0293	N
9	Bluetooth daughter card (BDC-2.1) • 7454-CTO, 22x, 23x, 24x, 25x, 26x, 27x, 28x, 29x, 2Gx, 2Hx, 2Jx, 2Kx, 2Lx, 2Mx, 2Nx, 2Px, 2Qx, 2Rx, 2Sx, 2Tx, 2Ux, 2Vx, 2Wx, 2Xx, 2Yx, 2Zx, 32x, 33x, 34x, 36x, 38x, 3Hx, 3Jx, 3Kx, 3Lx, 3Mx, 3Nx, 3Px, 3Qx, 3Rx, 3Sx, 3Tx, 3Vx, 3Wx, 3Xx, 92x, 93x, 95x, 96x, 97x, 98x, 9Bx, 9Cx, 9Fx, 9Gx, 9Hx, 9Jx, G3x, G4x, G5x, G6x, G7x, GBx, GCx, GEx, GJx, GKx, GNx • 7455-CTO, 32x, 33x, 34x, 35x, 36x, 38x, 39x, 3Ax, 3Bx, 3Cx, 3Dx, 3Ex, 3Fx, 3Gx, 3Hx, 3Jx, 3Kx, 3Lx, 3Mx, 3Nx, 3Px, 3Qx, 3Rx, 3Sx, 3Tx, 3Ux, 3Vx, 3Wx, 3Xx, 3Yx, 3Zx, 42x, 43x, 44x, 45x, 46x, 47x, 48x, 49x, 4Ax, 4Bx, 4Cx, 4Dx, 4Ex, 4Fx, 4Gx, 4Hx, 4Jx, 4Kx, 4Lx, 4Mx, 4Nx, 4Px, 4Qx, 4Rx, 4Sx, 4Tx, 4Ux, 4Vx, 4Wx, 4Xx, 4Yx, 4Zx, 82x, 83x, 84x, 85x, 86x, 87x, 88x, 89x, 8Ax, 8Bx, 8Cx, 8Dx, 8Ex, 8Fx, 8Gx, 8Hx, 8Jx, 8Kx, 8Lx, 8Mx, 8Nx, 8Px, 8Qx, 8Rx, 8Sx, 8Tx, 8Ux, 8Vx, 8Wx, 8Xx, 8Yx, 8Zx, D2x, D3x, D5x, D6x, D7x, D8x, D9x, DAx, DBx, DCx, DDx, DEx, DFx, DGx, DHx, DJx, DKx, DLx, DMx, DNx, DPx, DQx, DRx, DSx, DTx, DUx, DVx, DWx, DXx, DYx, DZx, F2x, F4x, F5x, F6x, F7x, F9x, FBx, FCx, FDx, FEx, FFx, FGx, FHx, FJx, FKx, FLx, FMx, FNx, FPx, FQx, FRx, FSx, FUx, FVx, FWx, FXx, FYx, FZx, N2x, N3x, N4x, N5x, P2x, P3x, P4x, P5x, P6x, P7x, P9x, PAx, PBx, PCx, PDx, PEx, PFx, PGx, PHx, PJx • 7457-CTO, 42x, 43x, 44x, 45x, 46x, 47x, 48x, 49x, 4Bx, 4Cx, 4Dx, 4Ex, 4Fx, 4Jx, 4Kx, 4Lx, 4Mx, 4Nx, 4Px, 4Qx, 4Rx, 4Sx, 4Tx, 4Wx, 53x, 54x, 56x, 57x, 58x • 7458-CTO, 22x, 24x, 25x, 26x, 27x, 28x, 29x, 2Ax, 2Bx, 2Cx, 2Dx, 2Ex, 2Fx, 2Kx, 2Lx, 2Mx, 2Nx, 2Px, 2Qx, 2Rx, 2Sx, 2Tx, 2Vx, 4Xx, 4Yx, 52x, 53x, 54x, 55x, 56x, 57x, 58x, 59x, 5Ax, 5Bx, 5Cx, 5Dx, 5Ex, 5Fx, 5Hx, 5Jx, 5Lx, 5Mx, 5Nx, 5Px, 5Qx, 5Rx, 5Sx, 5Tx, 62x, 63x, 64x, 65x, 66x, 67x, 68x, 69x, 6Ax, 6Bx, 6Cx, 6Dx, 6Ex, 6Jx, 6Kx, 6Lx, 6Mx, 6Nx, 6Px, 6Qx, 6Rx, 6Sx, 6Tx, 6Ux, 6Vx, 6Wx, 6Xx, 6Yx, 6Zx, 72x, 73x, 74x, 76x, 77x, 78x, 79x, 7Bx, 7Cx, 7Dx, 7Ex, 7Fx, 7Gx, 7Hx, 7Jx, 7Kx, 7Lx, 7Px, 7Qx, 7Rx, 7Sx, 7Tx, 7Ux, 7Vx, 7Xx, 7Yx, 7Zx, 82x, 83x, 84x, 85x, 86x, 87x, 88x, 89x, 8Ax, 8Bx, 8Dx, 8Ex, 8Fx, 8Gx, 8Hx, 8Jx, 8Kx, 8Lx, 8Mx, 8Nx, 8Px, 8Rx, 8Sx, 8Tx, 8Xx, 8Yx, 8Zx, E2x, F2x, F3x, F4x,	42T0969	N

Downloaded from LpManual.com Manuals

Table 38. Parts list—12.1-in. WXGA TFT (continued)

No.	FRU	FRU no.	CRU ID
	F5x, F6x, F7x, F8x, F9x, FAx, FCx, FDx, FEx, FFx, FGx, FHx, FJx, FKx, FLx, FMx, FNx, FPx, FQx, FSx, FTx, FUx, FVx, FWx, FXx, FYx, G3x, G4x, G5x, G6x, G7x, G8x, G9x, GBx, GCx, GDx, GEx, GFx, M2x, M3x, X4x • 7459-CTO, 5Ex, 5Fx, 62x, 63x, 64x, 65x, 66x, 67x, 68x, 69x, 6Ax, 6Bx, 6Cx, 6Dx, 6Ex, 6Fx, 6Gx, 6Jx, 6Kx, 6Lx, 6Mx, 6Nx, 6Px, 6Qx, 6Rx, 6Sx, 6Tx, 6Ux, 6Vx, 6Wx, 6Xx, 6Yx, 6Zx, 72x, 73x, 74x, 75x, E3x, H2x, H3x, H4x, H5x, H6x, H7x, M2x, M3x, M4x • 2023-CTO • 2024-CTO(continued)		
9	(continued) Bluetooth daughter card (BDC-2.1) • 7462-CTO, 25x, 26x, 2Ax, 2Bx, 2Gx, 2Hx, 43x, 44x, 45x, 46x, 47x, 48x, 49x, 4Ax, 4Bx, 4Cx, 4Dx, 4Ex, 4Fx, 4Gx, 4Hx, 4Qx, 4Rx, 4Sx, 4Tx, 4Ux, 4Vx, 4Xx, 4Yx, F2x, F3x, F4x, F5x, F8x, F9x, FDx, FEx, FHx, FJx, FKx, FLx, FMx, FNx, FRx, FSx, FUx, FVx • 7465-CTO, 23x, 24x, 25x, 26x, 27x, 28x, 29x, 2Dx, 2Lx, 2Mx, 2Nx, 2Px, 2Qx, 2Rx, 2Sx, 2Tx, 2Ux, 2Vx, 2Wx, 2Xx, 2Zx, 3Jx, 3Lx, 3Sx, 3Tx, 3Ux, 3Yx, 3Zx, D4x, D6x, D7x, D8x, D9x, DAx, DBx, DCx, DDx, DEx, DFx, G3x, G4x, G7x, G8x, G9x, GAx, GBx • 7466-CTO, 32x, 33x, 34x, 35x, 38x, 39x, 3Px, 3Qx, 3Rx, 3Sx, 3Tx, 3Ux, 3Vx, 3Xx, 3Yx, 3Zx, 43x, 45x, 46x, 47x, 48x, 49x, 4Ax, 4Bx, 4Cx, 4Dx, 4Ex, 4Fx, 4Kx, 4Lx, 4Mx, 4Nx, 4Px, 4Qx, 4Sx, 4Vx, 4Wx, 4Xx, 4Yx, 4Zx, 52x, 53x, 54x, 55x, 56x, 57x, 58x, 59x, 5Ax, 5Bx, 5Cx, 5Dx, 5Ex, 5Fx, 5Gx, 5Hx, 5Jx, 5Kx, 5Lx, 5Mx, 5Nx, 5Px, 5Qx, 5Rx, 5Sx, 5Tx, 5Ux, 5Vx, 5Wx, 5Xx, 5Yx, 92x, 93x, 95x, 96x, 97x, 98x, 99x, 9Ax, 9Bx, 9Cx, 9Dx, 9Ex, 9Fx, 9Gx, 9Hx, 9Jx, 9Kx, 9Lx, 9Mx, 9Nx, 9Px, 9Qx, 9Rx, 9Sx, 9Tx, 9Ux, 9Vx, 9Wx, 9Xx, 9Yx, 9Zx, DMx, F2x, F3x, F4x, F5x, F6x, F7x, F8x, F9x, FAx, FBx, FCx, FDx, FEx, FFx, FGx, FHx, FJx, FKx, FLx, FMx, FNx, FPx, FQx, FRx, FSx, FTx, FUx, FVx, FWx, FXx, FYx, FZx, H2x, H4x, H5x, H6x, H7x, H8x, H9x, HAx, HBx, HCx, HDx, HEx, N2x • 7469-CTO, 52x, 53x, 55x, 56x, 57x, 5Ex, 5Fx, 5Gx, 5Hx, 5Jx, 5Kx, 5Sx, 5Tx, 5Yx, 5Zx, 62x, 65x, 66x, 67x, 68x, 6Bx, 6Cx, 6Dx, 6Ex, 6Fx, 6Gx, 6Hx, 6Jx, 6Kx, 6Lx, 6Mx, 6Nx, 6Px, 6Qx, 6Rx, 6Tx, 6Ux, 6Vx, 6Wx, 6Xx, 6Yx, 6Zx, 72x, 73x, 74x, 75x, 76x, 77x, 79x, 7Bx, 7Cx, 7Dx, 7Ex, 7Fx, 7Hx, 7Jx, 7Kx, 7Lx, 7Qx, 7Rx, 7Sx, 7Tx, 7Xx, 83x, 84x, 8Bx, 8Cx, 8Dx, 8Ex, 8Fx, 8Lx, 8Mx, 8Nx, 8Rx, 8Sx, 8Tx, 8Ux, 8Vx, 8Wx, 8Xx, 8Yx, 8Zx, 93x, 94x, 95x, 96x, 97x, 98x, 99x, 9Ax, 9Bx, 9Cx, 9Dx, 9Ex, 9Gx, E2x, G2x, G3x, G4x, G5x, G6x, G7x, G8x, G9x, GAx, GBx • 7470-CTO, 5Gx, 5Hx, 68x, 69x, 6Ax, 6Hx, 6Px, 6Rx, 6Sx, 6Tx, 6Ux, 6Vx, 72x, 73x, 74x, 75x, 76x, 77x, 8Tx, 8Ux, 8Zx • 2046-CTO • 2047-CTO	42T0969	N
9	Bluetooth daughter card (BDC-2.1) • 3249-CTO, 22x, 23x, 24x, 25x, 26x, 27x, 28x, 29x, 2Ax, 2Bx, 2Cx, 2Dx, 2Ex, 2Fx, 2Gx, 2Hx, 2Jx, 2Kx, 2Lx, J3x, J4x, J5x, J6x, J7x, J8x, 2Nx, J9x, JAx, 2Mx, 2Rx, 2Px, 2Sx, 2Tx, 2Ux, 2Vx, NRx, NSx, NTx, Nux, JMx, JNx, JPx, JQx, JRx, JSx, JTx, JUx, 32x, 3Rx, 33x, 3Sx, 34x, 3Tx, 35x, 3Ux, 36x, 3Vx, 37x, NVx, 3Wx, 38x, C2x, C3x, MGx, MHx, MJx, MKx, MLx, MMx, MNx, MPx, MRx, MSx, MTx, MWx, MYx, 2Wx, 2Zx, 3Ax, 3Cx, 3Ex, 3Gx, 3Jx, 3Lx, 3Nx, CCx, CEx, CGx, 3Xx, C8x, CKx, CHx, CMx, CNx, CPx, CRx, CSx, CTx, CUx, CJx, CLx, DFx, 3Yx, EPx, ERx, ESx, DCx, DDx, DEx, DGx, DHx, DJx, ENx, QBx, QM+ QR+ QC+ QD+ QA+ Q9+ 19x, 1Ax, 1Bx, 1Cx, 1Dx, 1Ex • 3323-CTO, 12x, 1Lx, 1Mx, 1Nx, 1Px, 1Rx, 1Sx, 1Tx, 1Ux, 1Vx, 1Wx, 1Xx, 1Yx, 1Zx, 3Q+ 3Zx, 42x, 43x, 44x, 45x, 46x, 48x, 49x, 4Ax, 4Cx, 4Dx, 4Ex, 4Fx, 4Gx, 4Hx, 4Jx, 4Kx, 4Lx, 4Mx, 4Nx, 4Px, 4Rx, 4Sx, 4Tx, 4Ux, 4Vx, 4Wx, 4Yx, 4Zx, 52x, 54x, 55x, 56x, 57x, 58x, 59x, 5Ax, 5Bx, 5Cx, 5Dx, 5Ex, 5Fx, 5Gx, 5Hx, 5Jx, 5Kx, 5Lx, 5Mx, 5Nx, 5Px, 5Rx, 5Sx, 5Tx, 5Ux, 5Vx, 5Wx, 5Yx, 5Zx, 62x, 63x, 64x, 65x, 66x, 67x, 68x, 69x, 6Ax, 6Bx, 6Cx, 6Dx, 6Ex, 6Fx, 6Gx, 6Hx, 6Jx, 6Kx, 6Lx, 6Mx, 6Nx, 6Px, 6Rx, 6Sx, 6Tx, 6Ux, 6Vx, 6Wx, 6Yx, 6Zx, 72x, 73x, 74x, 75x, 76x, 77x, 78x, 79x, 7Ax, 7Bx, 7Cx, 7Dx, 7Ex, 7Fx, 7Gx, 7Hx, 7Jx, 7Kx, 7Lx, 7Mx, 7Nx, 7Px, 7Rx, 7Sx, 7Tx, 7Ux, 7Vx, 7Wx, 7Xx, 7Yx, 7Zx, 82x, 83x, 84x, 85x, 86x, 87x, 88x, 89x, 8Ax, 8Bx, 8Cx, 8Dx, 8Ex, 8Fx, 8Gx, 8Jx, 8Kx, 8Lx, 8Nx, 8Px, 8Rx, 8Sx, 8Tx, 8Ux, 8Vx, 8Wx, 8Xx, 8Yx, 8Zx, 92x, 93x, 94x, 95x, 96x, 97x, 98x, 99x, 9Ax, 9Bx,	60Y3211	N

Downloaded from LpManual.com Manuals

Table 38. Parts list—12.1-in. WXGA TFT (continued)

No.	FRU	FRU no.	CRU ID
	9Cx, 9Dx, 9Ex, 9Fx, 9Gx, 9Hx, 9Jx, 9Kx, 9Lx, 9Mx, 9Nx, 9Px, 9Rx, 9Sx, 9Tx, 9Ux, 9Vx, 9Wx, 9Yx, 9Zx, A2x, A3x, A4x, A5x, A6x, A7x, A8x, A9x, AAx, ABx, ACx, ADx, AEx, AFx, AGx, AHx, AJx, AKx, ALx, AMx, ANx, APx, ARx, ASx, ATx, AUx, AWx, AYx, B2x, B3x, B4x, B5x, B6x, B7x, B8x, B9x, BAx, BBx, BCx, BDx, BEx, BFx, BGx, BHx, BJx, BKx, BLx, BMx, BNx, BPx, BRx, BSx, BTx, BUx, BVx, BWx, BXx, BYx, BZx, C4x, C5x, C6x, C7x, C9x, CAx, CVx, CWx, CXx, CYx, CZx, D8x, D9x, DAx, DBx, DKx, DLx, DMx, DNx, DPx, DRx, DSx, DTx, DUx, DVx, DWx, DXx, DYx, DZx, E2x, E3x, E4x, E5x, E6x, E7x, E8x, E9x, EAx, EBx, EEx, EFx, EGx, EHx, EJx, EKx, ELx, EMx, ETx, EUx, EVx, EWx, EXx, EYx, EZx, JBx, JCx, JDx, JEx, K2x, K3x, K4x, K5x, K6x, K7x, K8x, K9x, KAx, KCx, KDx, KEx, KFx, KGx, KHx, KJx, KLx, KMx, KNx, KPx, KRx, KSx, KTx, KUx, KVx, KWx, KYx, KZx, L2x, L3x, L4x, L5x, L6x, L7x, L8x, LAx, LBx, LCx, LDx, LEx, LFx, LGx, LHx, LJx, LKx, LLx, LPx, LRx, LSx, LTx, LUx, LVx, LWx, LXx, LYx, LZx, M2x, M3x, M4x, M5x, M6x, M7x, M8x, M9x, MAx, MBx, MEx, MFx, N3x, N4x, N5x, N6x, N7x, N8x, N9x, NAx, NBx, NCx, NDx, NEx, NFx, NGx, NHx, NJx, NKx, NLx, NNx, NPx, NWx, NXx, NYx, NZx, PMx, PNx, PPx, PRx, PSx, PTx, PUx, QE+ QVx, QWx, QXx, QYx, QZ+ R2x, RAx, RBx, RCx, RDx, REx, RFx, RGx, RHx, RJx, RKx, RLx, RNx, RPx, RRx, RSx • 3357-CTO, 3Px, D2x, D3x, D4x, D5x, D6x, D7x, LMx, LNx • 3626-CTO, 11x, 12x, 13x, 14x, 15x, 16x, 17x, 18x, 19x, 1Kx, F2x, F3x, F4x, F5x, F6x, F7x, F9x, FAx, FBx, FCx, FDx, FEx, FFx, FGx, FHx, FJx, FKx, FLx, FMx, FNx, FPx, FRx, FSx, FTx, FUx, FVx, FWx, FXx, FYx, FZx, G2x, G3x, G4x, G5x, G6x, G7x, G8x, G9x, GAx, GBx, GCx, GDx, GEx, GFx, GHx, GJx, GKx, GLx, GMx, GNx, GPx, GRx, GSx, GTx, GUx, GVx, GWx, GXx, GYx, GZx, H2x, H3x, H4x, H5x, H6x, H7x, H8x, H8x, H9x, H9x, HAx, HBx, HCx, HDx, HEx, HFx, HGx, HHx, HJx, HKx, HLx, HMx, HUx, HWx, HXx, Hyx, HZx, PVx, PWx, PXx, PYx, PZx, Q2x, Q3x, Q4x, Q5x, QFx, QG+ QH+ QJ+ QK+ QSx, QTx, R3x, R4x, R4x, R5x, R5x, R6x, R6x, R7x, R8x, R9x, RMx, RTx, RUx, RVx, RWx, RXx, N2x, Q8x • 3680-CTO, 11x, 14x, 4Q+ F7x, F9x, FAx, FBx, H8x, H9x, HAx, HBx, HCx, HNx, HPx, HQx, HRx, HSx, HTx, P2x, P3x, P4x, P5x, P6x, PJx, P7x, P8x, P9x, PAx, PBx, PCx, PDx, PEx, PFx, PGx, PHx, PKx, Q6x, Q7x, N2x • 3712-CTO • 4492-CTO		
9	Bluetooth daughter card (BDC-2.1) • 3249-CTO, 22x, 23x, 24x, 25x, 26x, 27x, 28x, 29x, 2Ax, 2Bx, 2Cx, 2Dx, 2Ex, 2Fx, 2Gx, 2Hx, 2Jx, 2Kx, 2Lx, J3x, J4x, J5x, J6x, J7x, J8x, 2Nx, J9x, JAx, 2Mx, 2Rx, 2Px, 2Sx, 2Tx, 2Ux, 2Vx, NRx, NSx, NTx, Nux, JMx, JNx, JPx, JQx, JRx, JSx, JTx, JUx, 32x, 3Rx, 33x, 3Sx, 34x, 3Tx, 35x, 3Ux, 36x, 3Vx, 37x, NVx, 3Wx, 38x, C2x, C3x, MGx, MHx, MJx, MKx, MLx, MMx, MNx, MPx, MRx, MSx, MTx, MWx, MYx, 2Wx, 2Zx, 3Ax, 3Cx, 3Ex, 3Gx, 3Jx, 3Lx, 3Nx, CCx, CEx, CGx, 3Xx, C8x, CKx, CHx, CMx, CNx, CPx, CRx, CSx, CTx, CUx, CJx, CLx, DFx, 3Yx, EPx, ERx, ESx, DCx, DDx, DEx, DGx, DHx, DJx, ENx, QBx, QM+ QR+ QC+ QD+ QA+ Q9+ 19x, 1Ax, 1Bx, 1Cx, 1Dx, 1Ex • 3323-CTO, 12x, 1Lx, 1Mx, 1Nx, 1Px, 1Rx, 1Sx, 1Tx, 1Ux, 1Vx, 1Wx, 1Xx, 1Yx, 1Zx, 3Q+ 3Zx, 42x, 43x, 44x, 45x, 46x, 48x, 49x, 4Ax, 4Cx, 4Dx, 4Ex, 4Fx, 4Gx, 4Hx, 4Jx, 4Kx, 4Lx, 4Mx, 4Nx, 4Px, 4Rx, 4Sx, 4Tx, 4Ux, 4Vx, 4Wx, 4Yx, 4Zx, 52x, 54x, 55x, 56x, 57x, 58x, 59x, 5Ax, 5Bx, 5Cx, 5Dx, 5Ex, 5Fx, 5Gx, 5Hx, 5Jx, 5Kx, 5Lx, 5Mx, 5Nx, 5Px, 5Rx, 5Sx, 5Tx, 5Ux, 5Vx, 5Wx, 5Yx, 5Zx, 62x, 63x, 64x, 65x, 66x, 67x, 68x, 69x, 6Ax, 6Bx, 6Cx, 6Dx, 6Ex, 6Fx, 6Gx, 6Hx, 6Jx, 6Kx, 6Lx, 6Mx, 6Nx, 6Px, 6Rx, 6Sx, 6Tx, 6Ux, 6Vx, 6Wx, 6Yx, 6Zx, 72x, 73x, 74x, 75x, 76x, 77x, 78x, 79x, 7Ax, 7Bx, 7Cx, 7Dx, 7Ex, 7Fx, 7Gx, 7Hx, 7Jx, 7Kx, 7Lx, 7Mx, 7Nx, 7Px, 7Rx, 7Sx, 7Tx, 7Ux, 7Vx, 7Wx, 7Xx, 7Yx, 7Zx, 82x, 83x, 84x, 85x, 86x, 87x, 88x, 89x, 8Ax, 8Bx, 8Cx, 8Dx, 8Ex, 8Fx, 8Gx, 8Jx, 8Kx, 8Lx, 8Nx, 8Px, 8Rx, 8Sx, 8Tx, 8Ux, 8Vx, 8Wx, 8Xx, 8Yx, 8Zx, 92x, 93x, 94x, 95x, 96x, 97x, 98x, 99x, 9Ax, 9Bx, 9Cx, 9Dx, 9Ex, 9Fx, 9Gx, 9Hx, 9Jx, 9Kx, 9Lx, 9Mx, 9Nx, 9Px, 9Rx, 9Sx, 9Tx, 9Ux, 9Vx, 9Wx, 9Yx, 9Zx, A2x, A3x, A4x, A5x, A6x, A7x, A8x, A9x, AAx, ABx, ACx, ADx, AEx, AFx, AGx, AHx, AJx, AKx, ALx, AMx, ANx, APx, ARx, ASx, ATx, AUx, AWx, AYx, B2x, B3x, B4x, B5x, B6x, B7x, B8x, B9x, BAx, BBx, BCx, BDx, BEx, BFx, BGx, BHx, BJx, BKx, BLx, BMx, BNx, BPx, BRx, BSx, BTx, BUx, BVx, BWx, BXx, BYx, BZx, C4x, C5x, C6x, C7x,	60Y3215	N

Downloaded from LpManual.com Manuals

Table 38. Parts list—12.1-in. WXGA TFT (continued)

No.	FRU	FRU no.	CRU ID
	C9x, CAx, CVx, CWx, CXx, CYx, CZx, D8x, D9x, DAx, DBx, DKx, DLx, DMx, DNx, DPx, DRx, DSx, DTx, DUx, DVx, DWx, DXx, DYx, DZx, E2x, E3x, E4x, E5x, E6x, E7x, E8x, E9x, EAx, EBx, EEx, EFx, EGx, EHx, EJx, EKx, ELx, EMx, ETx, EUx, EVx, EWx, EXx, EYx, EZx, JBx, JCx, JDx, JEx, K2x, K3x, K4x, K5x, K6x, K7x, K8x, K9x, KAx, KCx, KDx, KEx, KFx, KGx, KHx, KJx, KLx, KMx, KNx, KPx, KRx, KSx, KTx, KUx, KVx, KWx, KYx, KZx, L2x, L3x, L4x, L5x, L6x, L7x, L8x, LAx, LBx, LCx, LDx, LEx, LFx, LGx, LHx, LJx, LKx, LLx, LPx, LRx, LSx, LTx, LUx, LVx, LWx, LXx, LYx, LZx, M2x, M3x, M4x, M5x, M6x, M7x, M8x, M9x, MAx, MBx, MEx, MFx, N3x, N4x, N5x, N6x, N7x, N8x, N9x, NAx, NBx, NCx, NDx, NEx, NFx, NGx, NHx, NJx, NKx, NLx, NNx, NPx, NWx, NXx, NYx, NZx, PMx, PNx, PPx, PRx, PSx, PTx, PUx, QE+ QVx, QWx, QXx, QYx, QZ+ R2x, RAx, RBx, RCx, RDx, REx, RFx, RGx, RHx, RJx, RKx, RLx, RNx, RPx, RRx, RSx • 3357-CTO, 3Px, D2x, D3x, D4x, D5x, D6x, D7x, LMx, LNx • 3626-CTO, 11x, 12x, 13x, 14x, 15x, 16x, 17x, 18x, 19x, 1Kx, F2x, F3x, F4x, F5x, F6x, F7x, F9x, FAx, FBx, FCx, FDx, FEx, FFx, FGx, FHx, FJx, FKx, FLx, FMx, FNx, FPx, FRx, FSx, FTx, FUx, FVx, FWx, FXx, FYx, FZx, G2x, G3x, G4x, G5x, G6x, G7x, G8x, G9x, GAx, GBx, GCx, GDx, GEx, GFx, GHx, GJx, GKx, GLx, GMx, GNx, GPx, GRx, GSx, GTx, GUx, GVx, GWx, GXx, GYx, GZx, H2x, H3x, H4x, H5x, H6x, H7x, H8x, H8x, H9x, H9x, HAx, HBx, HCx, HDx, HEx, HFx, HGx, HHx, HJx, HKx, HLx, HMx, HUx, HWx, HXx, Hyx, HZx, PVx, PWx, PXx, PYx, PZx, Q2x, Q3x, Q4x, Q5x, QFx, QG+ QH+ QJ+ QK+ QSx, QTx, R3x, R4x, R4x, R5x, R5x, R6x, R6x, R7x, R8x, R9x, RMx, RTx, RUx, RVx, RWx, RXx, N2x, Q8x • 3680-CTO, 11x, 14x, 4Q+ F7x, F9x, FAx, FBx, H8x, H9x, HAx, HBx, HCx, HNx, HPx, HQx, HRx, HSx, HTx, P2x, P3x, P4x, P5x, P6x, PJx, P7x, P8x, P9x, PAx, PBx, PCx, PDx, PEx, PFx, PGx, PHx, PKx, Q6x, Q7x, N2x • 3712-CTO • 4492-CTO		
10	LCD panel, 12.1-in. WXGA, CCFL backlight • 7454-CTO, 22x, 23x, 24x, 25x, 26x, 27x, 28x, 29x, 2Gx, 2Hx, 2Jx, 2Kx, 2Lx, 2Mx, 2Nx, 2Px, 2Qx, 2Rx, 2Sx, 2Tx, 2Ux, 2Vx, 2Wx, 2Xx, 2Yx, 2Zx, 92x, 93x, 95x, 96x, 97x, 98x, 9Bx, 9Cx, 9Fx, 9Gx, 9Hx, 9Jx, 9Kx, 9Lx • 7455-CTO, 32x, 33x, 34x, 35x, 36x, 38x, 39x, 3Ax, 3Bx, 3Cx, 3Dx, 3Ex, 3Fx, 3Gx, 3Hx, 3Jx, 3Kx, 3Lx, 3Mx, 3Nx, 3Px, 3Qx, 3Rx, 3Sx, 3Tx, 3Ux, 3Vx, 3Wx, 3Xx, 3Yx, 3Zx, D2x, D3x, D5x, D6x, D7x, D8x, D9x, DAx, DBx, DCx, DDx, DEx, DFx, DGx, DHx, DJx, DKx, DLx, DMx, DNx, DPx, DQx, DRx, DSx, DTx, DUx, DVx, DWx, DXx, DYx, DZx, N2x, N3x, N4x, N5x • 7457-CTO, 42x, 43x, 44x, 45x, 46x, 47x, 48x, 49x, 4Ax, 4Bx, 4Cx, 4Dx, 4Ex, 4Fx, 4Gx, 4Hx, 4Jx, 4Kx, 4Lx, 4Mx, 4Nx, 4Px, 4Qx, 4Rx, 4Sx, 4Tx, 4Ux, 4Vx, 4Wx • 7458-CTO, 4Xx, 4Yx, 52x, 53x, 54x, 55x, 56x, 57x, 58x, 59x, 5Ax, 5Bx, 5Cx, 5Dx, 5Ex, 5Fx, 5Hx, 5Jx, 5Lx, 5Mx, 5Nx, 5Px, 5Qx, 5Rx, 5Sx, 5Tx, 69x, 72x, 73x, 74x, 76x, 77x, 78x, 79x, 7Bx, 7Cx, 7Dx, 7Ex, 7Fx, 7Gx, 7Hx, 7Jx, 7Kx, 7Lx, 7Mx, 7Nx, 7Px, 7Qx, 7Rx, 7Sx, 7Tx, 7Ux, 7Vx, 7Wx, 7Xx, 7Yx, 7Zx, 82x, 83x, 84x, 85x, 86x, 87x, 88x, 89x, 8Ax, 8Bx, 8Cx, 8Dx, 8Ex, 8Fx, 8Gx, 8Hx, 8Jx, 8Kx, 8Lx, 8Mx, 8Nx, 8Px, 8Qx, 8Rx, 8Sx, 8Tx, 8Wx, 8Xx, 8Yx, 8Zx, E2x, F2x, F3x, F4x, F5x, F6x, F7x, F8x, F9x, FAx, FCx, FDx, FEx, FFx, FGx, FHx, FJx, FKx, FLx, FMx, FNx, FPx, FQx, FSx, FTx, FUx, FVx, FWx, FXx, FYx, G3x, G4x, G5x, G6x, G7x, G8x, G9x, GBx, GCx, GDx, GEx, GFx, M2x, M3x, X4x, X5x • 7459-CTO, 5Ex, 5Fx, 62x, 63x, 64x, 65x, 66x, 67x, 68x, 69x, 6Ax, 6Bx, 6Cx, 6Dx, 6Ex, 6Fx, 6Gx, 6Jx, 6Kx, 6Lx, 6Mx, 6Nx, 6Px, 6Qx, 6Rx, 6Sx, 6Tx, 6Ux, 6Vx, 6Wx, 6Xx, 6Yx, 6Zx, E3x, H2x, H3x, H4x, H5x, H6x, H7x, M2x, M3x, M4x • 2023-CTO • 2024-CTO • 7462-CTO, 42x, 43x, 44x, 45x, 46x, 47x, 48x, 49x, 4Ax, 4Bx, 4Cx, 4Dx, 4Ex, 4Fx, 4Gx, 4Hx, 4Qx, 4Rx, 4Sx, 4Tx, 4Ux, 4Vx, 4Wx, 4Xx, 4Yx, F2x, F3x, F4x, F5x, F6x, F7x, F8x, F9x, FAx, FBx, FCx, FDx, FEx, FFx, FGx, FHx, FJx, FKx, FLx, FMx, FNx, FRx, FSx, FUx, FVx • 7465-CTO, 23x, 24x, 25x, 26x, 27x, 28x, 29x, 2Dx, 2Lx, 2Mx, 2Nx, 2Px, 2Qx, 2Rx, 2Sx, 2Tx, 2Ux, 2Vx, 2Wx, 2Xx, 2Zx, D4x, D6x, D7x, D8x, D9x, DAx, DBx, DCx, DDx, DEx, DFx, DGx, DHx, DJx, DKx	42T0510	N

Downloaded from LpManual.com Manuals

Table 38. Parts list—12.1-in. WXGA TFT (continued)

No.	FRU	FRU no.	CRU ID
	• 7466-CTO, 32x, 33x, 34x, 35x, 38x, 39x, 3Px, 3Qx, 3Rx, 3Sx, 3Tx, 3Ux, 3Vx, 3Xx, 3Yx, 3Zx, 92x, 93x, 95x, 96x, 97x, 98x, 99x, 9Ax, 9Bx, 9Cx, 9Dx, 9Ex, 9Fx, 9Gx, 9Hx, 9Jx, 9Kx, 9Lx, 9Mx, 9Nx, 9Px, 9Qx, 9Rx, 9Sx, 9Tx, 9Ux, 9Vx, 9Wx, 9Xx, 9Yx, 9Zx, DLx, DMx, H2x, H3x, H4x, H5x, H6x, H7x, H8x, H9x, HAx, HBx, HCx, HDx, HEx • 7469-CTO, 52x, 53x, 55x, 56x, 57x, 58x, 59x, 5Ax, 5Bx, 5Cx, 5Dx, 5Ex, 5Fx, 5Gx, 5Hx, 5Jx, 5Kx, 5Sx, 5Tx, 5Yx, 5Zx, 72x, 73x, 74x, 75x, 76x, 77x, 79x, 7Bx, 7Cx, 7Dx, 7Ex, 7Fx, 7Hx, 7Jx, 7Kx, 7Lx, 7Qx, 7Rx, 7Sx, 7Tx, 7Xx, 83x, 84x, 8Bx, 8Cx, 8Dx, 8Ex, 8Fx, 8Lx, 8Mx, 8Nx, 8Rx, 8Sx, 8Tx, 8Ux, 8Vx, 8Wx, 8Xx, 8Yx, 8Zx, E2x, G2x, G3x, G4x, G5x, G6x, G7x, G8x, G9x, GAx, GBx, GCx • 7470-CTO, 5Gx, 5Hx, 62x, 63x, 65x, 68x, 69x, 6Ax, 6Hx, 6Px, 6Rx, 6Sx, 6Tx, 6Ux, 6Vx, 8Tx, 8Ux, 8Zx, E2x • 2046-CTO • 2047-CTO		
10	LCD panel, 12.1-in. WXGA, CCFL backlight • 7454-CTO, 22x, 23x, 24x, 25x, 26x, 27x, 28x, 29x, 2Gx, 2Hx, 2Jx, 2Kx, 2Lx, 2Mx, 2Nx, 2Px, 2Qx, 2Rx, 2Sx, 2Tx, 2Ux, 2Vx, 2Wx, 2Xx, 2Yx, 2Zx, 92x, 93x, 95x, 96x, 97x, 98x, 9Bx, 9Cx, 9Fx, 9Gx, 9Hx, 9Jx, 9Kx, 9Lx • 7455-CTO, 32x, 33x, 34x, 35x, 36x, 38x, 39x, 3Ax, 3Bx, 3Cx, 3Dx, 3Ex, 3Fx, 3Gx, 3Hx, 3Jx, 3Kx, 3Lx, 3Mx, 3Nx, 3Px, 3Qx, 3Rx, 3Sx, 3Tx, 3Ux, 3Vx, 3Wx, 3Xx, 3Yx, 3Zx, D2x, D3x, D5x, D6x, D7x, D8x, D9x, DAx, DBx, DCx, DDx, DEx, DFx, DGx, DHx, DJx, DKx, DLx, DMx, DNx, DPx, DQx, DRx, DSx, DTx, DUx, DVx, DWx, DXx, DYx, DZx, N2x, N3x, N4x, N5x • 7457-CTO, 42x, 43x, 44x, 45x, 46x, 47x, 48x, 49x, 4Ax, 4Bx, 4Cx, 4Dx, 4Ex, 4Fx, 4Gx, 4Hx, 4Jx, 4Kx, 4Lx, 4Mx, 4Nx, 4Px, 4Qx, 4Rx, 4Sx, 4Tx, 4Ux, 4Vx, 4Wx • 7458-CTO, 4Xx, 4Yx, 52x, 53x, 54x, 55x, 56x, 57x, 58x, 59x, 5Ax, 5Bx, 5Cx, 5Dx, 5Ex, 5Fx, 5Hx, 5Jx, 5Lx, 5Mx, 5Nx, 5Px, 5Qx, 5Rx, 5Sx, 5Tx, 69x, 72x, 73x, 74x, 76x, 77x, 78x, 79x, 7Bx, 7Cx, 7Dx, 7Ex, 7Fx, 7Gx, 7Hx, 7Jx, 7Kx, 7Lx, 7Mx, 7Nx, 7Px, 7Qx, 7Rx, 7Sx, 7Tx, 7Ux, 7Vx, 7Wx, 7Xx, 7Yx, 7Zx, 82x, 83x, 84x, 85x, 86x, 87x, 88x, 89x, 8Ax, 8Bx, 8Cx, 8Dx, 8Ex, 8Fx, 8Gx, 8Hx, 8Jx, 8Kx, 8Lx, 8Mx, 8Nx, 8Px, 8Qx, 8Rx, 8Sx, 8Tx, 8Wx, 8Xx, 8Yx, 8Zx, E2x, F2x, F3x, F4x, F5x, F6x, F7x, F8x, F9x, FAx, FCx, FDx, FEx, FFx, FGx, FHx, FJx, FKx, FLx, FMx, FNx, FPx, FQx, FSx, FTx, FUx, FVx, FWx, FXx, FYx, G3x, G4x, G5x, G6x, G7x, G8x, G9x, GBx, GCx, GDx, GEx, GFx, M2x, M3x, X4x, X5x • 7459-CTO, 5Ex, 5Fx, 62x, 63x, 64x, 65x, 66x, 67x, 68x, 69x, 6Ax, 6Bx, 6Cx, 6Dx, 6Ex, 6Fx, 6Gx, 6Jx, 6Kx, 6Lx, 6Mx, 6Nx, 6Px, 6Qx, 6Rx, 6Sx, 6Tx, 6Ux, 6Vx, 6Wx, 6Xx, 6Yx, 6Zx, E3x, H2x, H3x, H4x, H5x, H6x, H7x, M2x, M3x, M4x • 2023-CTO • 2024-CTO • 7462-CTO, 42x, 43x, 44x, 45x, 46x, 47x, 48x, 49x, 4Ax, 4Bx, 4Cx, 4Dx, 4Ex, 4Fx, 4Gx, 4Hx, 4Qx, 4Rx, 4Sx, 4Tx, 4Ux, 4Vx, 4Wx, 4Xx, 4Yx, F2x, F3x, F4x, F5x, F6x, F7x, F8x, F9x, FAx, FBx, FCx, FDx, FEx, FFx, FGx, FHx, FJx, FKx, FLx, FMx, FNx, FRx, FSx, FUx, FVx • 7465-CTO, 23x, 24x, 25x, 26x, 27x, 28x, 29x, 2Dx, 2Lx, 2Mx, 2Nx, 2Px, 2Qx, 2Rx, 2Sx, 2Tx, 2Ux, 2Vx, 2Wx, 2Xx, 2Zx, D4x, D6x, D7x, D8x, D9x, DAx, DBx, DCx, DDx, DEx, DFx, DGx, DHx, DJx, DKx • 7466-CTO, 32x, 33x, 34x, 35x, 38x, 39x, 3Px, 3Qx, 3Rx, 3Sx, 3Tx, 3Ux, 3Vx, 3Xx, 3Yx, 3Zx, 92x, 93x, 95x, 96x, 97x, 98x, 99x, 9Ax, 9Bx, 9Cx, 9Dx, 9Ex, 9Fx, 9Gx, 9Hx, 9Jx, 9Kx, 9Lx, 9Mx, 9Nx, 9Px, 9Qx, 9Rx, 9Sx, 9Tx, 9Ux, 9Vx, 9Wx, 9Xx, 9Yx, 9Zx, DLx, DMx, H2x, H3x, H4x, H5x, H6x, H7x, H8x, H9x, HAx, HBx, HCx, HDx, HEx • 7469-CTO, 52x, 53x, 55x, 56x, 57x, 58x, 59x, 5Ax, 5Bx, 5Cx, 5Dx, 5Ex, 5Fx, 5Gx, 5Hx, 5Jx, 5Kx, 5Sx, 5Tx, 5Yx, 5Zx, 72x, 73x, 74x, 75x, 76x, 77x, 79x, 7Bx, 7Cx, 7Dx, 7Ex, 7Fx, 7Hx, 7Jx, 7Kx, 7Lx, 7Qx, 7Rx, 7Sx, 7Tx, 7Xx, 83x, 84x, 8Bx, 8Cx, 8Dx, 8Ex, 8Fx, 8Lx, 8Mx, 8Nx, 8Rx, 8Sx, 8Tx, 8Ux, 8Vx, 8Wx, 8Xx, 8Yx, 8Zx, E2x, G2x, G3x, G4x, G5x, G6x, G7x, G8x, G9x, GAx, GBx, GCx • 7470-CTO, 5Gx, 5Hx, 62x, 63x, 65x, 68x, 69x, 6Ax, 6Hx, 6Px, 6Rx, 6Sx, 6Tx, 6Ux, 6Vx, 8Tx, 8Ux, 8Zx, E2x • 2046-CTO • 2047-CTO	42T0478	N

Downloaded from LpManual.com Manuals

Table 38. Parts list—12.1-in. WXGA TFT (continued)

No.	FRU	FRU no.	CRU ID
10	LCD panel, 12.1-in. WXGA, CCFL backlight • 7454-CTO, 22x, 23x, 24x, 25x, 26x, 27x, 28x, 29x, 2Gx, 2Hx, 2Jx, 2Kx, 2Lx, 2Mx, 2Nx, 2Px, 2Qx, 2Rx, 2Sx, 2Tx, 2Ux, 2Vx, 2Wx, 2Xx, 2Yx, 2Zx, 92x, 93x, 95x, 96x, 97x, 98x, 9Bx, 9Cx, 9Fx, 9Gx, 9Hx, 9Jx, 9Kx, 9Lx • 7455-CTO, 32x, 33x, 34x, 35x, 36x, 38x, 39x, 3Ax, 3Bx, 3Cx, 3Dx, 3Ex, 3Fx, 3Gx, 3Hx, 3Jx, 3Kx, 3Lx, 3Mx, 3Nx, 3Px, 3Qx, 3Rx, 3Sx, 3Tx, 3Ux, 3Vx, 3Wx, 3Xx, 3Yx, 3Zx, D2x, D3x, D5x, D6x, D7x, D8x, D9x, DAx, DBx, DCx, DDx, DEx, DFx, DGx, DHx, DJx, DKx, DLx, DMx, DNx, DPx, DQx, DRx, DSx, DTx, DUx, DVx, DWx, DXx, DYx, DZx, N2x, N3x, N4x, N5x • 7457-CTO, 42x, 43x, 44x, 45x, 46x, 47x, 48x, 49x, 4Ax, 4Bx, 4Cx, 4Dx, 4Ex, 4Fx, 4Gx, 4Hx, 4Jx, 4Kx, 4Lx, 4Mx, 4Nx, 4Px, 4Qx, 4Rx, 4Sx, 4Tx, 4Ux, 4Vx, 4Wx • 7458-CTO, 4Xx, 4Yx, 52x, 53x, 54x, 55x, 56x, 57x, 58x, 59x, 5Ax, 5Bx, 5Cx, 5Dx, 5Ex, 5Fx, 5Hx, 5Jx, 5Lx, 5Mx, 5Nx, 5Px, 5Qx, 5Rx, 5Sx, 5Tx, 69x, 72x, 73x, 74x, 76x, 77x, 78x, 79x, 7Bx, 7Cx, 7Dx, 7Ex, 7Fx, 7Gx, 7Hx, 7Jx, 7Kx, 7Lx, 7Mx, 7Nx, 7Px, 7Qx, 7Rx, 7Sx, 7Tx, 7Ux, 7Vx, 7Wx, 7Xx, 7Yx, 7Zx, 82x, 83x, 84x, 85x, 86x, 87x, 88x, 89x, 8Ax, 8Bx, 8Cx, 8Dx, 8Ex, 8Fx, 8Gx, 8Hx, 8Jx, 8Kx, 8Lx, 8Mx, 8Nx, 8Px, 8Qx, 8Rx, 8Sx, 8Tx, 8Wx, 8Xx, 8Yx, 8Zx, E2x, F2x, F3x, F4x, F5x, F6x, F7x, F8x, F9x, FAx, FCx, FDx, FEx, FFx, FGx, FHx, FJx, FKx, FLx, FMx, FNx, FPx, FQx, FSx, FTx, FUx, FVx, FWx, FXx, FYx, G3x, G4x, G5x, G6x, G7x, G8x, G9x, GBx, GCx, GDx, GEx, GFx, M2x, M3x, X4x, X5x • 7459-CTO, 5Ex, 5Fx, 62x, 63x, 64x, 65x, 66x, 67x, 68x, 69x, 6Ax, 6Bx, 6Cx, 6Dx, 6Ex, 6Fx, 6Gx, 6Jx, 6Kx, 6Lx, 6Mx, 6Nx, 6Px, 6Qx, 6Rx, 6Sx, 6Tx, 6Ux, 6Vx, 6Wx, 6Xx, 6Yx, 6Zx, E3x, H2x, H3x, H4x, H5x, H6x, H7x, M2x, M3x, M4x • 2023-CTO • 2024-CTO • 7462-CTO, 42x, 43x, 44x, 45x, 46x, 47x, 48x, 49x, 4Ax, 4Bx, 4Cx, 4Dx, 4Ex, 4Fx, 4Gx, 4Hx, 4Qx, 4Rx, 4Sx, 4Tx, 4Ux, 4Vx, 4Wx, 4Xx, 4Yx, F2x, F3x, F4x, F5x, F6x, F7x, F8x, F9x, FAx, FBx, FCx, FDx, FEx, FFx, FGx, FHx, FJx, FKx, FLx, FMx, FNx, FRx, FSx, FUx, FVx • 7465-CTO, 23x, 24x, 25x, 26x, 27x, 28x, 29x, 2Dx, 2Lx, 2Mx, 2Nx, 2Px, 2Qx, 2Rx, 2Sx, 2Tx, 2Ux, 2Vx, 2Wx, 2Xx, 2Zx, D4x, D6x, D7x, D8x, D9x, DAx, DBx, DCx, DDx, DEx, DFx, DGx, DHx, DJx, DKx • 7466-CTO, 32x, 33x, 34x, 35x, 38x, 39x, 3Px, 3Qx, 3Rx, 3Sx, 3Tx, 3Ux, 3Vx, 3Xx, 3Yx, 3Zx, 92x, 93x, 95x, 96x, 97x, 98x, 99x, 9Ax, 9Bx, 9Cx, 9Dx, 9Ex, 9Fx, 9Gx, 9Hx, 9Jx, 9Kx, 9Lx, 9Mx, 9Nx, 9Px, 9Qx, 9Rx, 9Sx, 9Tx, 9Ux, 9Vx, 9Wx, 9Xx, 9Yx, 9Zx, DLx, DMx, H2x, H3x, H4x, H5x, H6x, H7x, H8x, H9x, HAx, HBx, HCx, HDx, HEx • 7469-CTO, 52x, 53x, 55x, 56x, 57x, 58x, 59x, 5Ax, 5Bx, 5Cx, 5Dx, 5Ex, 5Fx, 5Gx, 5Hx, 5Jx, 5Kx, 5Sx, 5Tx, 5Yx, 5Zx, 72x, 73x, 74x, 75x, 76x, 77x, 79x, 7Bx, 7Cx, 7Dx, 7Ex, 7Fx, 7Hx, 7Jx, 7Kx, 7Lx, 7Qx, 7Rx, 7Sx, 7Tx, 7Xx, 83x, 84x, 8Bx, 8Cx, 8Dx, 8Ex, 8Fx, 8Lx, 8Mx, 8Nx, 8Rx, 8Sx, 8Tx, 8Ux, 8Vx, 8Wx, 8Xx, 8Yx, 8Zx, E2x, G2x, G3x, G4x, G5x, G6x, G7x, G8x, G9x, GAx, GBx, GCx • 7470-CTO, 5Gx, 5Hx, 62x, 63x, 65x, 68x, 69x, 6Ax, 6Hx, 6Px, 6Rx, 6Sx, 6Tx, 6Ux, 6Vx, 8Tx, 8Ux, 8Zx, E2x • 2046-CTO • 2047-CTO	42T0482	N
10	LCD panel, 12.1-in. WXGA, LED backlight • 7454-CTO, 32x, 33x, 34x, 36x, 38x, 3Hx, 3Jx, 3Kx, 3Lx, 3Mx, 3Nx, 3Px, 3Qx, 3Rx, 3Sx, 3Tx, 3Vx, 3Wx, 3Xx, 3Yx, 3Zx, G2x, G3x, G4x, G5x, G6x, G7x, G8x, G9x, GBx, GCx, GDx, GEx, GFx, GGx, GHx, GJx, GKx, GLx, GMx, GNx, GPx • 7455-CTO, 42x, 43x, 44x, 45x, 46x, 47x, 48x, 49x, 4Ax, 4Bx, 4Cx, 4Dx, 4Ex, 4Fx, 4Gx, 4Hx, 4Jx, 4Kx, 4Lx, 4Mx, 4Nx, 4Px, 4Qx, 4Rx, 4Sx, 4Tx, 4Ux, 4Vx, 4Wx, 4Xx, 4Yx, 4Zx, 82x, 83x, 84x, 85x, 86x, 87x, 88x, 89x, 8Ax, 8Bx, 8Cx, 8Dx, 8Ex, 8Fx, 8Gx, 8Hx, 8Jx, 8Kx, 8Lx, 8Mx, 8Nx, 8Px, 8Qx, 8Rx, 8Sx, 8Tx, 8Ux, 8Vx, 8Wx, 8Xx, 8Yx, 8Zx, F2x, F3x, F4x, F5x, F6x, F7x, F9x, FBx, FCx, FDx, FEx, FFx, FGx, FHx, FJx, FKx, FLx, FMx, FNx, FPx, FQx, FRx, FSx, FTx, FUx, FVx, FWx, FXx, FYx, FZx, P2x, P3x, P4x, P5x, P6x, P7x, P9x, PAx, PBx, PCx, PDx, PEx, PFx, PGx, PHx, PJx • 7457-CTO, 52x, 53x, 54x, 55x, 56x, 57x, 58x	42T0709 42T0709 27R2453	N

Downloaded from LpManual.com Manuals

Table 38. Parts list—12.1-in. WXGA TFT (continued)

No.	FRU	FRU no.	CRU ID
	• 7458-CTO, 22x, 22x, 24x, 25x, 26x, 27x, 28x, 29x, 2Ax, 2Bx, 2Cx, 2Dx, 2Ex, 2Fx, 2Kx, 2Lx, 2Mx, 2Nx, 2Px, 2Qx, 2Rx, 2Sx, 2Tx, 2Vx, 62x, 63x, 64x, 65x, 66x, 67x, 68x, 6Ax, 6Bx, 6Cx, 6Dx, 6Ex, 6Jx, 6Kx, 6Lx, 6Mx, 6Nx, 6Px, 6Qx, 6Rx, 6Sx, 6Tx, 6Ux, 6Vx, 6Wx, 6Xx, 6Yx, 6Zx • 7459-CTO, 72x, 73x, 74x, 75x • 2023-CTO • 2024-CTO • 7462-CTO, 22x, 23x, 24x, 25x, 26x, 27x, 28x, 29x, 2Ax, 2Bx, 2Cx, 2Dx, 2Ex, 2Fx, 2Gx, 2Hx • 7465-CTO, 3Jx, 3Lx, 3Nx, 3Px, 3Rx, 3Sx, 3Tx, 3Ux, 3Vx, 3Wx, 3Xx, 3Yx, 3Zx, G2x, G3x, G4x, G5x, G6x, G7x, G8x, G9x, GAx, GBx • 7466-CTO, 43x, 45x, 46x, 47x, 48x, 49x, 4Ax, 4Bx, 4Cx, 4Dx, 4Ex, 4Fx, 4Hx, 4Jx, 4Kx, 4Lx, 4Mx, 4Nx, 4Px, 4Qx, 4Sx, 4Vx, 4Wx, 4Xx, 4Yx, 4Zx, 52x, 53x, 54x, 55x, 56x, 57x, 58x, 59x, 5Ax, 5Bx, 5Cx, 5Dx, 5Ex, 5Fx, 5Gx, 5Hx, 5Jx, 5Kx, 5Lx, 5Mx, 5Nx, 5Px, 5Qx, 5Rx, 5Sx, 5Tx, 5Ux, 5Vx, 5Wx, 5Xx, 5Yx, 5Zx, F2x, F3x, F4x, F5x, F6x, F7x, F8x, F9x, FAx, FBx, FCx, FDx, FEx, FFx, FGx, FHx, FJx, FKx, FLx, FMx, FNx, FPx, FQx, FRx, FSx, FTx, FUx, FVx, FWx, FXx, FYx, FZx, N2x • 7469-CTO, 62x, 63x, 64x, 65x, 66x, 67x, 68x, 6Bx, 6Cx, 6Dx, 6Ex, 6Fx, 6Gx, 6Hx, 6Jx, 6Kx, 6Lx, 6Mx, 6Nx, 6Px, 6Qx, 6Rx, 6Tx, 6Ux, 6Vx, 6Wx, 6Xx, 6Yx, 6Zx, 93x, 94x, 95x, 96x, 97x, 98x, 99x, 9Ax, 9Bx, 9Cx, 9Dx, 9Ex, 9Gx • 7470-CTO, 72x, 73x, 74x, 75x, 76x, 77x • 2046-CTO • 2047-CTO • 3249-all • 3323-all • 3357-all • 3626-all • 3680-all • 3712-all • 4492-all		
10	LCD panel, 12.1-in. WXGA, LED backlight • 7454-CTO, 32x, 33x, 34x, 36x, 38x, 3Hx, 3Jx, 3Kx, 3Lx, 3Mx, 3Nx, 3Px, 3Qx, 3Rx, 3Sx, 3Tx, 3Vx, 3Wx, 3Xx, 3Yx, 3Zx, G2x, G3x, G4x, G5x, G6x, G7x, G8x, G9x, GBx, GCx, GDx, GEx, GFx, GGx, GHx, GJx, GKx, GLx, GMx, GNx, GPx • 7455-CTO, 42x, 43x, 44x, 45x, 46x, 47x, 48x, 49x, 4Ax, 4Bx, 4Cx, 4Dx, 4Ex, 4Fx, 4Gx, 4Hx, 4Jx, 4Kx, 4Lx, 4Mx, 4Nx, 4Px, 4Qx, 4Rx, 4Sx, 4Tx, 4Ux, 4Vx, 4Wx, 4Xx, 4Yx, 4Zx, 82x, 83x, 84x, 85x, 86x, 87x, 88x, 89x, 8Ax, 8Bx, 8Cx, 8Dx, 8Ex, 8Fx, 8Gx, 8Hx, 8Jx, 8Kx, 8Lx, 8Mx, 8Nx, 8Px, 8Qx, 8Rx, 8Sx, 8Tx, 8Ux, 8Vx, 8Wx, 8Xx, 8Yx, 8Zx, F2x, F3x, F4x, F5x, F6x, F7x, F9x, FBx, FCx, FDx, FEx, FFx, FGx, FHx, FJx, FKx, FLx, FMx, FNx, FPx, FQx, FRx, FSx, FTx, FUx, FVx, FWx, FXx, FYx, FZx, P2x, P3x, P4x, P5x, P6x, P7x, P9x, PAx, PBx, PCx, PDx, PEx, PFx, PGx, PHx, PJx • 7457-CTO, 52x, 53x, 54x, 55x, 56x, 57x, 58x • 7458-CTO, 22x, 22x, 24x, 25x, 26x, 27x, 28x, 29x, 2Ax, 2Bx, 2Cx, 2Dx, 2Ex, 2Fx, 2Kx, 2Lx, 2Mx, 2Nx, 2Px, 2Qx, 2Rx, 2Sx, 2Tx, 2Vx, 62x, 63x, 64x, 65x, 66x, 67x, 68x, 6Ax, 6Bx, 6Cx, 6Dx, 6Ex, 6Jx, 6Kx, 6Lx, 6Mx, 6Nx, 6Px, 6Qx, 6Rx, 6Sx, 6Tx, 6Ux, 6Vx, 6Wx, 6Xx, 6Yx, 6Zx • 7459-CTO, 72x, 73x, 74x, 75x • 2023-CTO • 2024-CTO • 7462-CTO, 22x, 23x, 24x, 25x, 26x, 27x, 28x, 29x, 2Ax, 2Bx, 2Cx, 2Dx, 2Ex, 2Fx, 2Gx, 2Hx • 7465-CTO, 3Jx, 3Lx, 3Nx, 3Px, 3Rx, 3Sx, 3Tx, 3Ux, 3Vx, 3Wx, 3Xx, 3Yx, 3Zx, G2x, G3x, G4x, G5x, G6x, G7x, G8x, G9x, GAx, GBx • 7466-CTO, 43x, 45x, 46x, 47x, 48x, 49x, 4Ax, 4Bx, 4Cx, 4Dx, 4Ex, 4Fx, 4Hx, 4Jx, 4Kx, 4Lx, 4Mx, 4Nx, 4Px, 4Qx, 4Sx, 4Vx, 4Wx, 4Xx, 4Yx, 4Zx, 52x, 53x, 54x, 55x, 56x, 57x, 58x, 59x, 5Ax, 5Bx, 5Cx, 5Dx, 5Ex, 5Fx, 5Gx, 5Hx, 5Jx, 5Kx, 5Lx, 5Mx, 5Nx, 5Px, 5Qx, 5Rx, 5Sx, 5Tx, 5Ux, 5Vx, 5Wx, 5Xx, 5Yx, 5Zx, F2x, F3x, F4x, F5x, F6x, F7x, F8x, F9x, FAx, FBx, FCx, FDx, FEx, FFx, FGx, FHx, FJx, FKx, FLx, FMx, FNx, FPx, FQx, FRx, FSx, FTx, FUx, FVx, FWx, FXx, FYx, FZx, N2x	42T0715	N

Downloaded from LpManual.com Manuals

Table 38. Parts list—12.1-in. WXGA TFT (continued)

No.	FRU	FRU no.	CRU ID
	• 7469-CTO, 62x, 63x, 64x, 65x, 66x, 67x, 68x, 6Bx, 6Cx, 6Dx, 6Ex, 6Fx, 6Gx, 6Hx, 6Jx, 6Kx, 6Lx, 6Mx, 6Nx, 6Px, 6Qx, 6Rx, 6Tx, 6Ux, 6Vx, 6Wx, 6Xx, 6Yx, 6Zx, 93x, 94x, 95x, 96x, 97x, 98x, 99x, 9Ax, 9Bx, 9Cx, 9Dx, 9Ex, 9Gx • 7470-CTO, 72x, 73x, 74x, 75x, 76x, 77x • 2046-CTO • 2047-CTO		
10	LCD panel, 12.1-in. WXGA, LED backlight • 7454-CTO, 32x, 33x, 34x, 36x, 38x, 3Hx, 3Jx, 3Kx, 3Lx, 3Mx, 3Nx, 3Px, 3Qx, 3Rx, 3Sx, 3Tx, 3Vx, 3Wx, 3Xx, 3Yx, 3Zx, G2x, G3x, G4x, G5x, G6x, G7x, G8x, G9x, GBx, GCx, GDx, GEx, GFx, GGx, GHx, GJx, GKx, GLx, GMx, GNx, GPx • 7455-CTO, 42x, 43x, 44x, 45x, 46x, 47x, 48x, 49x, 4Ax, 4Bx, 4Cx, 4Dx, 4Ex, 4Fx, 4Gx, 4Hx, 4Jx, 4Kx, 4Lx, 4Mx, 4Nx, 4Px, 4Qx, 4Rx, 4Sx, 4Tx, 4Ux, 4Vx, 4Wx, 4Xx, 4Yx, 4Zx, 82x, 83x, 84x, 85x, 86x, 87x, 88x, 89x, 8Ax, 8Bx, 8Cx, 8Dx, 8Ex, 8Fx, 8Gx, 8Hx, 8Jx, 8Kx, 8Lx, 8Mx, 8Nx, 8Px, 8Qx, 8Rx, 8Sx, 8Tx, 8Ux, 8Vx, 8Wx, 8Xx, 8Yx, 8Zx, F2x, F3x, F4x, F5x, F6x, F7x, F9x, FBx, FCx, FDx, FEx, FFx, FGx, FHx, FJx, FKx, FLx, FMx, FNx, FPx, FQx, FRx, FSx, FTx, FUx, FVx, FWx, FXx, FYx, FZx, P2x, P3x, P4x, P5x, P6x, P7x, P9x, PAx, PBx, PCx, PDx, PEx, PFx, PGx, PHx, PJx • 7457-CTO, 52x, 53x, 54x, 55x, 56x, 57x, 58x • 7458-CTO, 22x, 22x, 24x, 25x, 26x, 27x, 28x, 29x, 2Ax, 2Bx, 2Cx, 2Dx, 2Ex, 2Fx, 2Kx, 2Lx, 2Mx, 2Nx, 2Px, 2Qx, 2Rx, 2Sx, 2Tx, 2Vx, 62x, 63x, 64x, 65x, 66x, 67x, 68x, 6Ax, 6Bx, 6Cx, 6Dx, 6Ex, 6Jx, 6Kx, 6Lx, 6Mx, 6Nx, 6Px, 6Qx, 6Rx, 6Sx, 6Tx, 6Ux, 6Vx, 6Wx, 6Xx, 6Yx, 6Zx • 7459-CTO, 72x, 73x, 74x, 75x • 2023-CTO • 2024-CTO • 7462-CTO, 22x, 23x, 24x, 25x, 26x, 27x, 28x, 29x, 2Ax, 2Bx, 2Cx, 2Dx, 2Ex, 2Fx, 2Gx, 2Hx • 7465-CTO, 3Jx, 3Lx, 3Nx, 3Px, 3Rx, 3Sx, 3Tx, 3Ux, 3Vx, 3Wx, 3Xx, 3Yx, 3Zx, G2x, G3x, G4x, G5x, G6x, G7x, G8x, G9x, GAx, GBx • 7466-CTO, 43x, 45x, 46x, 47x, 48x, 49x, 4Ax, 4Bx, 4Cx, 4Dx, 4Ex, 4Fx, 4Hx, 4Jx, 4Kx, 4Lx, 4Mx, 4Nx, 4Px, 4Qx, 4Sx, 4Vx, 4Wx, 4Xx, 4Yx, 4Zx, 52x, 53x, 54x, 55x, 56x, 57x, 58x, 59x, 5Ax, 5Bx, 5Cx, 5Dx, 5Ex, 5Fx, 5Gx, 5Hx, 5Jx, 5Kx, 5Lx, 5Mx, 5Nx, 5Px, 5Qx, 5Rx, 5Sx, 5Tx, 5Ux, 5Vx, 5Wx, 5Xx, 5Yx, 5Zx, F2x, F3x, F4x, F5x, F6x, F7x, F8x, F9x, FAx, FBx, FCx, FDx, FEx, FFx, FGx, FHx, FJx, FKx, FLx, FMx, FNx, FPx, FQx, FRx, FSx, FTx, FUx, FVx, FWx, FXx, FYx, FZx, N2x • 7469-CTO, 62x, 63x, 64x, 65x, 66x, 67x, 68x, 6Bx, 6Cx, 6Dx, 6Ex, 6Fx, 6Gx, 6Hx, 6Jx, 6Kx, 6Lx, 6Mx, 6Nx, 6Px, 6Qx, 6Rx, 6Tx, 6Ux, 6Vx, 6Wx, 6Xx, 6Yx, 6Zx, 93x, 94x, 95x, 96x, 97x, 98x, 99x, 9Ax, 9Bx, 9Cx, 9Dx, 9Ex, 9Gx • 7470-CTO, 72x, 73x, 74x, 75x, 76x, 77x • 2046-CTO • 2047-CTO • 3249-all • 3323-all • 3357-all • 3626-all • 3680-all • 3712-all • 4492-all	42T0711	N
10	LCD panel, 12.1-in. WXGA, LED backlight • 7454-CTO, 32x, 33x, 34x, 36x, 38x, 3Hx, 3Jx, 3Kx, 3Lx, 3Mx, 3Nx, 3Px, 3Qx, 3Rx, 3Sx, 3Tx, 3Vx, 3Wx, 3Xx, 3Yx, 3Zx, G2x, G3x, G4x, G5x, G6x, G7x, G8x, G9x, GBx, GCx, GDx, GEx, GFx, GGx, GHx, GJx, GKx, GLx, GMx, GNx, GPx • 7455-CTO, 42x, 43x, 44x, 45x, 46x, 47x, 48x, 49x, 4Ax, 4Bx, 4Cx, 4Dx, 4Ex, 4Fx, 4Gx, 4Hx, 4Jx, 4Kx, 4Lx, 4Mx, 4Nx, 4Px, 4Qx, 4Rx, 4Sx, 4Tx, 4Ux, 4Vx, 4Wx, 4Xx, 4Yx, 4Zx, 82x, 83x, 84x, 85x, 86x, 87x, 88x, 89x, 8Ax, 8Bx, 8Cx, 8Dx, 8Ex, 8Fx, 8Gx, 8Hx, 8Jx, 8Kx, 8Lx, 8Mx, 8Nx, 8Px, 8Qx, 8Rx, 8Sx, 8Tx, 8Ux, 8Vx, 8Wx, 8Xx, 8Yx, 8Zx, F2x, F3x, F4x, F5x, F6x, F7x, F9x, FBx, FCx, FDx, FEx, FFx, FGx, FHx, FJx, FKx, FLx, FMx, FNx, FPx,	42T0713	N

Downloaded from LpManual.com Manuals

Table 38. Parts list—12.1-in. WXGA TFT (continued)

No.	FRU	FRU no.	CRU ID
	FQx, FRx, FSx, FTx, FUx, FVx, FWx, FXx, FYx, FZx, P2x, P3x, P4x, P5x, P6x, P7x, P9x, PAx, PBx, PCx, PDx, PEx, PFx, PGx, PHx, PJx • 7457-CTO, 52x, 53x, 54x, 55x, 56x, 57x, 58x • 7458-CTO, 22x, 22x, 24x, 25x, 26x, 27x, 28x, 29x, 2Ax, 2Bx, 2Cx, 2Dx, 2Ex, 2Fx, 2Kx, 2Lx, 2Mx, 2Nx, 2Px, 2Qx, 2Rx, 2Sx, 2Tx, 2Vx, 62x, 63x, 64x, 65x, 66x, 67x, 68x, 6Ax, 6Bx, 6Cx, 6Dx, 6Ex, 6Jx, 6Kx, 6Lx, 6Mx, 6Nx, 6Px, 6Qx, 6Rx, 6Sx, 6Tx, 6Ux, 6Vx, 6Wx, 6Xx, 6Yx, 6Zx • 7459-CTO, 72x, 73x, 74x, 75x • 2023-CTO • 2024-CTO • 7462-CTO, 22x, 23x, 24x, 25x, 26x, 27x, 28x, 29x, 2Ax, 2Bx, 2Cx, 2Dx, 2Ex, 2Fx, 2Gx, 2Hx • 7465-CTO, 3Jx, 3Lx, 3Nx, 3Px, 3Rx, 3Sx, 3Tx, 3Ux, 3Vx, 3Wx, 3Xx, 3Yx, 3Zx, G2x, G3x, G4x, G5x, G6x, G7x, G8x, G9x, GAx, GBx • 7466-CTO, 43x, 45x, 46x, 47x, 48x, 49x, 4Ax, 4Bx, 4Cx, 4Dx, 4Ex, 4Fx, 4Hx, 4Jx, 4Kx, 4Lx, 4Mx, 4Nx, 4Px, 4Qx, 4Sx, 4Vx, 4Wx, 4Xx, 4Yx, 4Zx, 52x, 53x, 54x, 55x, 56x, 57x, 58x, 59x, 5Ax, 5Bx, 5Cx, 5Dx, 5Ex, 5Fx, 5Gx, 5Hx, 5Jx, 5Kx, 5Lx, 5Mx, 5Nx, 5Px, 5Qx, 5Rx, 5Sx, 5Tx, 5Ux, 5Vx, 5Wx, 5Xx, 5Yx, 5Zx, F2x, F3x, F4x, F5x, F6x, F7x, F8x, F9x, FAx, FBx, FCx, FDx, FEx, FFx, FGx, FHx, FJx, FKx, FLx, FMx, FNx, FPx, FQx, FRx, FSx, FTx, FUx, FVx, FWx, FXx, FYx, FZx, N2x • 7469-CTO, 62x, 63x, 64x, 65x, 66x, 67x, 68x, 6Bx, 6Cx, 6Dx, 6Ex, 6Fx, 6Gx, 6Hx, 6Jx, 6Kx, 6Lx, 6Mx, 6Nx, 6Px, 6Qx, 6Rx, 6Tx, 6Ux, 6Vx, 6Wx, 6Xx, 6Yx, 6Zx, 93x, 94x, 95x, 96x, 97x, 98x, 99x, 9Ax, 9Bx, 9Cx, 9Dx, 9Ex, 9Gx • 7470-CTO, 72x, 73x, 74x, 75x, 76x, 77x • 2046-CTO • 2047-CTO • 3249-all • 3323-all • 3357-all • 3626-all • 3680-all • 3712-all • 4492-all		

Downloaded from LpManual.com Manuals

12.1-in. WXGA+ TFT

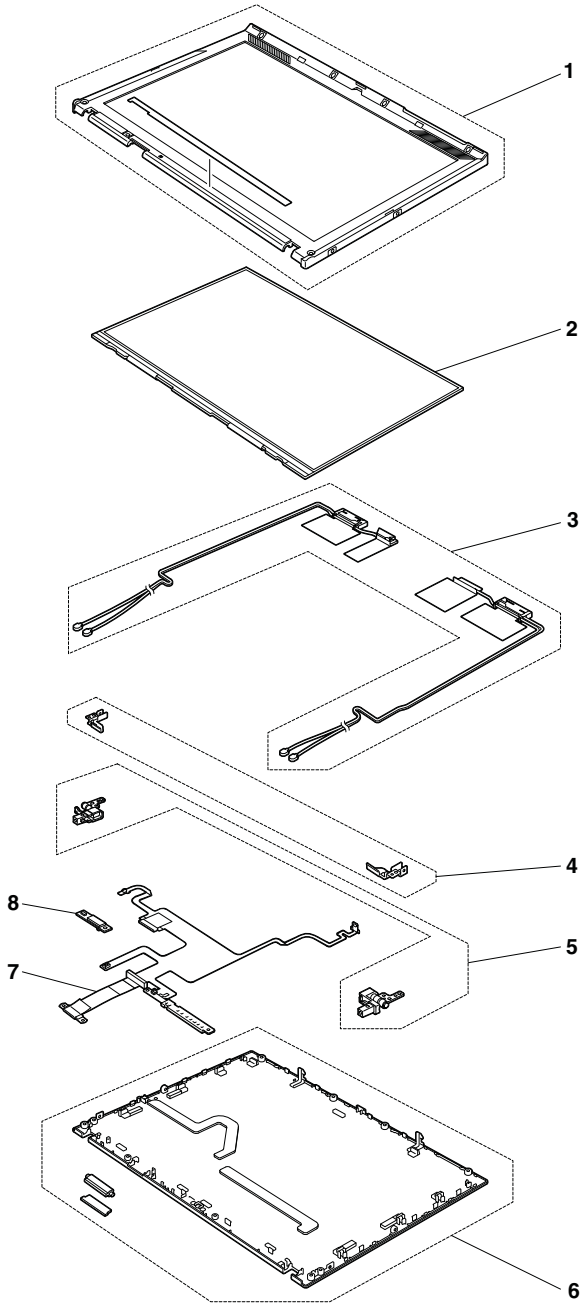

Table 39. Parts list—12.1-in. WXGA+ TFT

No.	FRU	FRU no.	CRU ID
1	LCD bezel assembly • 7462-CTO, 4Jx, 4Kx, 4Lx, 4Mx, 4Nx, 4Px, 4Zx, FPx, FQx, FTx • 7465-CTO, 2Ex, 2Fx, 2Hx, 2Jx, 2Kx, 2Yx, 3Kx, 3Mx, D2x, D3x • 7466-CTO, 3Ax, 3Bx, 3Cx, 3Dx, 3Ex, 3Fx, 3Gx, 3Hx, 3Jx, 3Kx, 3Lx, 3Mx, 3Nx, 3Wx, 44x, 4Rx, 4Tx, 4Ux, 94x • 7469-CTO, 54x, 5Lx, 5Mx, 5Nx, 5Px, 5Qx, 5Rx, 5Ux, 5Vx, 5Wx, 5Xx, 69x, 6Ax, 78x, 7Ax, 7Gx, 7Mx, 7Nx, 7Px, 7Ux, 7Vx, 7Yx, 7Zx, 82x, 85x, 86x, 87x, 88x, 89x, 8Ax, 8Gx, 8Hx, 8Jx, 8Kx, 8Px, 8Qx • 7470-CTO, 64x, 6Bx, 6Cx, 6Dx, 6Ex, 6Fx, 6Gx, 6Jx, 6Kx, 6Lx, 6Mx, 6Nx, 6Qx	45N3232 75Y4731 04W0361	N

Downloaded from LpManual.com Manuals

Table 39. Parts list—12.1-in. WXGA+ TFT (continued)

No.	FRU	FRU no.	CRU ID
	• 2046-CTO • 2047-CTO • 5129-all • 5143-all • 5385-all • 5397-all • 5413-all • 5442-all • 5446-all		
2	LCD panel, 12.1-in. WXGA+, LED backlight • 7462-CTO, 4Jx, 4Kx, 4Lx, 4Mx, 4Nx, 4Px, 4Zx, FPx, FQx, FTx • 7465-CTO, 2Ex, 2Fx, 2Hx, 2Jx, 2Kx, 2Yx, 3Kx, 3Mx, D2x, D3x • 7466-CTO, 3Ax, 3Bx, 3Cx, 3Dx, 3Ex, 3Fx, 3Gx, 3Hx, 3Jx, 3Kx, 3Lx, 3Mx, 3Nx, 3Wx, 44x, 4Rx, 4Tx, 4Ux, 94x • 7469-CTO, 54x, 5Lx, 5Mx, 5Nx, 5Px, 5Qx, 5Rx, 5Ux, 5Vx, 5Wx, 5Xx, 69x, 6Ax, 78x, 7Ax, 7Gx, 7Mx, 7Nx, 7Px, 7Ux, 7Vx, 7Yx, 7Zx, 82x, 85x, 86x, 87x, 88x, 89x, 8Ax, 8Gx, 8Hx, 8Jx, 8Kx, 8Px, 8Qx • 7470-CTO, 64x, 6Bx, 6Cx, 6Dx, 6Ex, 6Fx, 6Gx, 6Jx, 6Kx, 6Lx, 6Mx, 6Nx, 6Qx • 2046-CTO • 2047-CTO • 5129-all • 5143-all • 5385-all • 5397-all • 5413-all • 5442-all • 5446-all	42T0480	N
3	Wireless LAN/USB antenna kit • 7462-CTO • 7465-CTO • 7469-CTO • 7470-CTO • 7470-CTO • 2046-CTO • 2047-CTO	43Y9841	N
3	Wireless LAN antenna kit • 7462-CTO, 4Jx, 4Kx, 4Lx, 4Mx, 4Nx, 4Px, 4Zx, FPx, FQx, FTx • 7465-CTO, 2Ex, 2Fx, 2Hx, 2Jx, 2Kx, 2Yx, 3Kx, 3Mx, D2x, D3x • 7466-CTO, 3Ax, 3Bx, 3Cx, 3Dx, 3Ex, 3Fx, 3Gx, 3Hx, 3Jx, 3Kx, 3Lx, 3Mx, 3Nx, 3Wx, 44x, 4Rx, 4Tx, 4Ux, 94x • 7469-CTO, 54x, 5Lx, 5Mx, 5Nx, 5Px, 5Qx, 5Rx, 5Ux, 5Vx, 5Wx, 5Xx, 69x, 6Ax, 78x, 7Ax, 7Gx, 7Mx, 7Nx, 7Px, 7Ux, 7Vx, 7Yx, 7Zx, 82x, 85x, 86x, 87x, 88x, 89x, 8Ax, 8Gx, 8Hx, 8Jx, 8Kx, 8Px, 8Qx • 7470-CTO, 64x, 6Bx, 6Cx, 6Dx, 6Ex, 6Fx, 6Gx, 6Jx, 6Kx, 6Lx, 6Mx, 6Nx, 6Qx • 2046-CTO • 2047-CTO • 5129-all • 5143-all • 5385-all • 5397-all • 5413-all • 5442-all • 5446-all	44C9997	N

Downloaded from LpManual.com Manuals

Table 39. Parts list—12.1-in. WXGA+ TFT (continued)

No.	FRU	FRU no.	CRU ID
4	Hinge bracket L/R • 7462-CTO, 4Jx, 4Kx, 4Lx, 4Mx, 4Nx, 4Px, 4Zx, FPx, FQx, FTx • 7465-CTO, 2Ex, 2Fx, 2Hx, 2Jx, 2Kx, 2Yx, 3Kx, 3Mx, D2x, D3x • 7466-CTO, 3Ax, 3Bx, 3Cx, 3Dx, 3Ex, 3Fx, 3Gx, 3Hx, 3Jx, 3Kx, 3Lx, 3Mx, 3Nx, 3Wx, 44x, 4Rx, 4Tx, 4Ux, 94x • 7469-CTO, 54x, 5Lx, 5Mx, 5Nx, 5Px, 5Qx, 5Rx, 5Ux, 5Vx, 5Wx, 5Xx, 69x, 6Ax, 78x, 7Ax, 7Gx, 7Mx, 7Nx, 7Px, 7Ux, 7Vx, 7Yx, 7Zx, 82x, 85x, 86x, 87x, 88x, 89x, 8Ax, 8Gx, 8Hx, 8Jx, 8Kx, 8Px, 8Qx • 7470-CTO, 64x, 6Bx, 6Cx, 6Dx, 6Ex, 6Fx, 6Gx, 6Jx, 6Kx, 6Lx, 6Mx, 6Nx, 6Qx • 2046-CTO • 2047-CTO • 5129-all • 5143-all • 5385-all • 5397-all • 5413-all • 5442-all • 5446-all	45N3234	N
5	Hinge L/R • 7462-CTO, 4Jx, 4Kx, 4Lx, 4Mx, 4Nx, 4Px, 4Zx, FPx, FQx, FTx • 7465-CTO, 2Ex, 2Fx, 2Hx, 2Jx, 2Kx, 2Yx, 3Kx, 3Mx, D2x, D3x • 7466-CTO, 3Ax, 3Bx, 3Cx, 3Dx, 3Ex, 3Fx, 3Gx, 3Hx, 3Jx, 3Kx, 3Lx, 3Mx, 3Nx, 3Wx, 44x, 4Rx, 4Tx, 4Ux, 94x • 7469-CTO, 54x, 5Lx, 5Mx, 5Nx, 5Px, 5Qx, 5Rx, 5Ux, 5Vx, 5Wx, 5Xx, 69x, 6Ax, 78x, 7Ax, 7Gx, 7Mx, 7Nx, 7Px, 7Ux, 7Vx, 7Yx, 7Zx, 82x, 85x, 86x, 87x, 88x, 89x, 8Ax, 8Gx, 8Hx, 8Jx, 8Kx, 8Px, 8Qx • 7470-CTO, 64x, 6Bx, 6Cx, 6Dx, 6Ex, 6Fx, 6Gx, 6Jx, 6Kx, 6Lx, 6Mx, 6Nx, 6Qx • 2046-CTO • 2047-CTO	45N3233	N
5	Hinge L/R • 7462-CTO, 4Jx, 4Kx, 4Lx, 4Mx, 4Nx, 4Px, 4Zx, FPx, FQx, FTx • 7465-CTO, 2Ex, 2Fx, 2Hx, 2Jx, 2Kx, 2Yx, 3Kx, 3Mx, D2x, D3x • 7466-CTO, 3Ax, 3Bx, 3Cx, 3Dx, 3Ex, 3Fx, 3Gx, 3Hx, 3Jx, 3Kx, 3Lx, 3Mx, 3Nx, 3Wx, 44x, 4Rx, 4Tx, 4Ux, 94x • 7469-CTO, 54x, 5Lx, 5Mx, 5Nx, 5Px, 5Qx, 5Rx, 5Ux, 5Vx, 5Wx, 5Xx, 69x, 6Ax, 78x, 7Ax, 7Gx, 7Mx, 7Nx, 7Px, 7Ux, 7Vx, 7Yx, 7Zx, 82x, 85x, 86x, 87x, 88x, 89x, 8Ax, 8Gx, 8Hx, 8Jx, 8Kx, 8Px, 8Qx • 7470-CTO, 64x, 6Bx, 6Cx, 6Dx, 6Ex, 6Fx, 6Gx, 6Jx, 6Kx, 6Lx, 6Mx, 6Nx, 6Qx • 2046-CTO • 2047-CTO • 5129-all • 5143-all • 5385-all • 5397-all • 5413-all • 5442-all • 5446-all	60Y4174	N

Downloaded from LpManual.com Manuals

Table 39. Parts list—12.1-in. WXGA+ TFT (continued)

No.	FRU	FRU no.	CRU ID
6	LCD rear cover assembly • 7462-CTO, 4Jx, 4Kx, 4Lx, 4Mx, 4Nx, 4Px, 4Zx, FPx, FQx, FTx • 7465-CTO, 2Ex, 2Fx, 2Hx, 2Jx, 2Kx, 2Yx, 3Kx, 3Mx, D2x, D3x • 7466-CTO, 3Ax, 3Bx, 3Cx, 3Dx, 3Ex, 3Fx, 3Gx, 3Hx, 3Jx, 3Kx, 3Lx, 3Mx, 3Nx, 3Wx, 44x, 4Rx, 4Tx, 4Ux, 94x • 7469-CTO, 54x, 5Lx, 5Mx, 5Nx, 5Px, 5Qx, 5Rx, 5Ux, 5Vx, 5Wx, 5Xx, 69x, 6Ax, 78x, 7Ax, 7Gx, 7Mx, 7Nx, 7Px, 7Ux, 7Vx, 7Yx, 7Zx, 82x, 85x, 86x, 87x, 88x, 89x, 8Ax, 8Gx, 8Hx, 8Jx, 8Kx, 8Px, 8Qx • 7470-CTO, 64x, 6Bx, 6Cx, 6Dx, 6Ex, 6Fx, 6Gx, 6Jx, 6Kx, 6Lx, 6Mx, 6Nx, 6Qx • 2046-CTO • 2047-CTO	45N3201	N
6	LCD rear cover assembly for X201s	75Y4591	N
7	LCD cable assembly with Bluetooth connector • 7462-CTO, 4Jx, 4Kx, 4Lx, 4Mx, 4Nx, 4Px, 4Zx, FPx, FQx, FTx • 7465-CTO, 2Ex, 2Fx, 2Hx, 2Jx, 2Kx, 2Yx, 3Kx, 3Mx, D2x, D3x • 7466-CTO, 3Ax, 3Bx, 3Cx, 3Dx, 3Ex, 3Fx, 3Gx, 3Hx, 3Jx, 3Kx, 3Lx, 3Mx, 3Nx, 3Wx, 44x, 4Rx, 4Tx, 4Ux, 94x • 7469-CTO, 54x, 5Lx, 5Mx, 5Nx, 5Px, 5Qx, 5Rx, 5Ux, 5Vx, 5Wx, 5Xx, 69x, 6Ax, 78x, 7Ax, 7Gx, 7Mx, 7Nx, 7Px, 7Ux, 7Vx, 7Yx, 7Zx, 82x, 85x, 86x, 87x, 88x, 89x, 8Ax, 8Gx, 8Hx, 8Jx, 8Kx, 8Px, 8Qx • 7470-CTO, 64x, 6Bx, 6Cx, 6Dx, 6Ex, 6Fx, 6Gx, 6Jx, 6Kx, 6Lx, 6Mx, 6Nx, 6Qx • 2046-CTO • 2047-CTO • 5129-all • 5143-all • 5385-all • 5397-all • 5413-all • 5442-all • 5446-all	44C9919 63Y2213	N
8	Bluetooth daughter card (BDC-2.1) • 7462-CTO, 4Jx, 4Kx, 4Lx, 4Mx, 4Nx, 4Px, 4Zx, FPx, FQx, FTx • 7465-CTO, 2Ex, 2Fx, 2Hx, 2Jx, 2Kx, 2Yx, 3Kx, D2x, D3x • 7466-CTO, 3Ax, 3Bx, 3Cx, 3Dx, 3Ex, 3Fx, 3Gx, 3Hx, 3Jx, 3Kx, 3Lx, 3Mx, 3Nx, 3Wx, 44x, 4Rx, 4Tx, 4Ux, 94x • 7469-CTO, 54x, 5Lx, 5Mx, 5Nx, 5Px, 5Qx, 5Rx, 5Ux, 5Vx, 5Wx, 5Xx, 69x, 6Ax, 78x, 7Ax, 7Gx, 7Mx, 7Nx, 7Px, 7Ux, 7Vx, 7Yx, 7Zx, 82x, 85x, 87x, 88x, 89x, 8Ax, 8Gx, 8Hx, 8Jx, 8Kx, 8Px, 8Qx • 7470-CTO, 64x, 6Bx, 6Cx, 6Dx, 6Ex, 6Fx, 6Gx, 6Jx, 6Kx, 6Lx, 6Mx, 6Nx, 6Qx • 2046-CTO • 2047-CTO	42T0969	N
8	Bluetooth daughter card (BDC-2.1) • 5129-all • 5143-all • 5385-all • 5397-all • 5413-all • 5442-all • 5446-all	60Y3211	N
8	Bluetooth daughter card (BDC-2.1) • 5129-all • 5143-all • 5385-all • 5397-all	60Y3215	N

Downloaded from LpManual.com Manuals

Table 39. Parts list—12.1-in. WXGA+ TFT (continued)

No.	FRU	FRU no.	CRU ID
	• 5413-all • 5442-all • 5446-all		

Keyboard

Table 40. Parts list—Keyboard

Language	P/N		CRU ID
Arabic	42T3752	42T3686	**
Belgian	42T3749	42T3683	
Brazilian Portuguese	42T3768	42T3702	
Bulgarian	42T4143	42T4139	
Canadian French (058)	42T3739	42T3673	
Canadian French (Acnor)	42T3738	42T3672	
Czech	42T3757	42T3691	
Danish	42T3746	42T3680	
Dutch	42T3743	42T3677	
Finnish, Swedish	42T3744	42T3678	
French	42T3742	42T3676	
German	42T3740	42T3674	
Greek (U.S. English and Greek layout)	42T3759	42T3693	
Hebrew	42T3754	42T3688	
Hungarian	42T3758	42T3692	
Icelandic	42T3769	42T3703	
Italian	42T3747	42T3681	
Japanese	42T3762	42T3696	
Kazakhstan	42T4136	42T4133	
Korean	42T3764	42T3698	
Latin American Spanish	42T3765	42T3699	
Norwegian	42T3745	42T3679	
Polish	42T3755	42T3689	
Portuguese	42T3751	42T3685	
Russian	42T3753	42T3687	
Slovak	42T3761	42T3695	
Slovenian	42T3760	42T3694	
Spanish	42T3748	42T3682	
Swiss	42T3750	42T3684	
Thai	42T3766	42T3700	

Downloaded from LpManual.com Manuals

Table 40. Parts list—Keyboard (continued)

Language	P/N		CRU ID
Traditional Chinese	42T3763	42T3697	
Turkish	42T3756	42T3690	
U.K. English	42T3741	42T3675	
U.S. English	42T3737	42T3671	
U.S. English (International, with a Euro symbol)	42T3767	42T3701	

Miscellaneous parts

Table 41. Parts list—Miscellaneous parts

FRU	P/N	CRU ID
Screw kit for X200, X200s, and X200si	44C9558	N
Screw kit for X201, X201i, and X201s	75Y4454	N
Battery latch for X200 and X200s	45N4345	N
Base cover miscellaneous parts kit • SD cover • Dummy cover, RJ-11 connector • Knob, Wireless WAN • Knob screw, Wireless WAN • Latch, battery • Latch spring, battery	44C9556	N
System miscellaneous parts kit • *(a)* Top shielding assembly • Holder, Heat sink • I/O bracket, VGA • Inverter bracket, CCFL	44C9557	N
Rubber kit for X200, X200s, and X200si • Rubber foot, front • Rubber foot, rear Left • Rubber foot, rear Right • Rubber foot, battery	44C9554	N
Rubber kit for X201, X201i, and X201s • Rubber foot, front • Rubber foot, rear Left • Rubber foot, rear Right • Rubber foot, battery	75Y4453	N

AC adapters

Table 42. Parts list—ac adapters

FRU	P/N	CRU ID
2-pin (65 W, 20 V) adapter (models CTO, xxE, xxF, xxJ, xxL, xxP, xxS, xxY, xxU)	42T5282	*
2-pin (65 W, 20 V) adapter (models CTO, xxE, xxF, xxJ, xxL, xxP, xxS, xxY, xxU)	42T4423	*
2-pin (65 W, 20 V) adapter (models CTO, xxE, xxF, xxJ, xxL, xxP, xxS, xxY, xxU)	42T4419	*

Downloaded from LpManual.com Manuals

Table 42. Parts list—ac adapters (continued)

FRU	P/N	CRU ID
3-pin (65W, 20 V) adapter (models CTO, xxA, xxB, xxC, xxG, xxH, xxK, xxM, xxT, xxV) OP	42T5283	*
3-pin (65W, 20 V) adapter (models CTO, xxA, xxB, xxC, xxG, xxH, xxK, xxM, xxT, xxV) OP	42T4421	*
3-pin (65W, 20 V) adapter (models CTO, xxA, xxB, xxC, xxG, xxH, xxK, xxM, xxT, xxV) OP	42T4417	*

Power cords

A ThinkPad power cord for a specific country or region is usually available only in that country or region:

Table 43. Parts list—2-pin power cords

Country or region	FRU no.		CRU ID
Argentina • models -CTO, xxY	42T5020	42T5105	*
Brazil • models -CTO, xxP	42T5180	42T5183	
Canada, U.S. • models -CTO, xxF, xxL, xxS, xxU	42T5008	42T5093	
Japan • models -CTO, xxE, xxJ	42T5014	42T5099	

Table 44. Parts list—3-pin power cords

Country or region	FRU no.		CRU ID
Australia, New Zealand • models -CTO, xxM	42T5050	42T5135	*
Bangladesh, Sri Lanka, South Africa • models -CTO, xxG	42T5056	42T5141	
Canada, U.S. • models -CTO, xxG, xxT	42T5004	42T5089	
China (P.R.C.) (other than Hong Kong S.A.R.) • models -CTO, xxC	42T5065	42T5150	
Denmark • models -CTO, xxG	42T5041	42T5126	
European countries • models -CTO, xxG	42T5029	42T5114	
India • models -CTO, xxQ	42T5083	42T5168	
Israel • models -CTO, xxG	42T5062	42T5147	
Italy • models -CTO, xxG	42T5047	42T5132	
Korea • models -CTO, xxK	42T5077	42T5162	
Switzerland • models -CTO, xxG	42T5044	42T5129	

Downloaded from LpManual.com Manuals

Table 44. Parts list—3-pin power cords (continued)

Country or region	FRU no.		CRU ID
Taiwan • models -CTO, xxV	42T5071	42T5156	
U.K., China (Hong Kong S.A.R.) • models -CTO, xxB, xxG, xxH	42T5035	42T5120	

Recovery discs

Windows XP Professional (32 bit) DVDs

Windows XP Professional (32 bit) is preinstalled as the operating system in the following models:

- 7454-CTO, 2Qx, 2Rx, 2Tx, 2Ux, 2Vx, 2Wx, 2Xx, 2Yx, 2Zx, 32x, 34x, 36x, 3Sx, 92x, 93x, 95x, 96x, 9Bx, 9Cx, 9Gx, 9Jx, G4x, G5x, G6x, G7x, G8x, G9x, GKx
- 7455-CTO, 3Kx, 3Lx, 3Mx, 3Nx, 3Px, 3Qx, 3Rx, 4Jx, 4Lx, 4Mx, 4Px, 4Tx, 4Ux, 8Bx, DSx, DTx, F7x, F9x, FBx, FCx, N4x, PJx
- 7457-CTO, 4Kx, 4Lx, 4Mx, 4Nx, 4Px, 4Qx, 4Sx, 4Tx
- 7458-CTO, 4Xx, 63x, 68x, 6Bx, 7Sx, 7Tx, 7Ux, 7Vx, 7Wx, 7Xx, 7Yx, 7Zx, 82x, 83x, 84x, 85x, 86x, 87x, 88x, 89x, 8Ax, 8Mx, 8Nx, 8Px, 8Wx, FVx, FYx, G3x, M3x
- 7459-CTO, 5Ex, 72x
- 2023-CTO
- 2024-CTO
- 7462-CTO, 4Vx
- 7465-CTO, 2Sx, 2Tx, 2Ux, 2Vx, 2Xx, 2Zx, 3Nx, 3Px, 3Vx, G5x, DFx
- 7466-CTO, 32x, 33x, 3Kx, 3Lx, 3Nx, 3Rx, 3Sx, 43x, 45x, 4Jx, 4Mx, 4Qx, 4Sx, 4Ux, 5Wx, 5Xx, 5Zx, FNx, HDx
- 7469-CTO, 52x, 53x, 5Wx, 62x, 64x, 66x, 68x, 6Ax, 7Gx, 7Rx, 87x, 9Cx, 9Dx, G8x, G9x
- 7470-CTO, 5Gx, 5Hx, 6Lx, 6Qx, 72x
- 2046-CTO
- 2047-CTO

Note: The Windows XP Professional recovery DVDs are available only for models with a valid Microsoft Windows XP Professional certificate of authenticity (COA) affixed to the system. Due to a Microsoft licensing limitation, if a model came with Windows XP Professional preinstalled from the factory, but has either a Windows 7 or Windows Vista COA affixed to the system, that model is eligible only for recovery DVDs that match the operating system specified on the COA.

Table 45. Parts list—Windows XP Professional (32 bit) recovery DVDs

Language	P/N	CRU ID
Arabic	58Y2662	*
Brazilian Portuguese	58Y2663	
Czech	58Y2666	
Danish	58Y2667	
Dutch	58Y2678	
English	58Y2688	
English (modem-disabled)	58Y2687	
Finnish	58Y2668	

Downloaded from LpManual.com Manuals

Table 45. Parts list—Windows XP Professional (32 bit) recovery DVDs (continued)

Language	P/N	CRU ID
French	58Y2669	
German	58Y2671	
Greek	58Y2670	
Hebrew	58Y2672	
Hungarian	58Y2674	
Italian	58Y2675	
Japanese	58Y2676	
Korean	58Y2677	
Norwegian	58Y2679	
Polish	58Y2680	
Russian	58Y2682	
Russian (English-enabled)	58Y2681	
Simplified Chinese	58Y2664	
Slovenian	58Y2683	
Spanish	58Y2684	
Swedish	58Y2685	
Traditional Chinese	58Y2665	
Traditional Chinese (Hong Kong S.A.R.)	58Y2673	
Turkish	58Y2686	

- 3249-CTO
- 3323-CTO, 43x, 4Hx, 4Jx, 4Kx, 4Yx, 4Zx, 59x, 5Ax, 5Cx, 5Ex, 5Sx, 5Tx, 5Ux, 5Vx, 5Wx, 5Yx, 5Zx, 62x, 6Bx, 6Cx, 6Dx, 6Ex, 6Fx, 6Gx, 6Hx, 6Jx, 6Ux, 6Vx, 6Wx, 6Yx, 6Zx, 72x, 73x, 74x, 7Dx, 7Ex, 7Fx, 7Gx, 7Hx, 7Jx, 7Kx, 7Lx, 86x, 87x, 88x
- 3357-CTO
- 3626-CTO, FHx, FJx, FKx, FLx, FNx, FVx, G3x, G4x
- 3680-CTO
- 3712-CTO
- 4492-CTO
- 5129-CTO
- 5143-CTO, 2Hx, 2Jx, 2Kx, 2Lx, 2Mx, 2Nx, 2Px, 2Rx, 33x, 34x, 35x, 36x, 37x, 38x, 39x, 3Ax
- 5385-CTO
- 5397-CTO, FUx, FVx, FYx, FZx
- 5413-CTO
- 5442-CTO
- 5446-CTO

Downloaded from LpManual.com Manuals

Table 46. Parts list—Windows XP Professional (32 bit) recovery DVDs

Language	P/N	CRU ID
English	03W6165	*
French	03W6155	
German	03W6156	
Italian	03W6158	
Japanese	03W6159	
Korean	03W6160	
Russian	03W6162	
Russian (English-enabled)	03W6161	
Simplified Chinese	03W6153	
Spanish	03W6163	
Swedish	03W6164	
Traditional Chinese	03W6154	
Traditional Chinese (Hong Kong S.A.R.)	03W6157	

Windows Vista Home Basic (32-bit) DVDs

Windows Vista Home Basic (32-bit) is preinstalled as the operating system in the following models:

- 7454-CTO, 9Lx
- 7455-CTO, DGx, DHx
- 7457-CTO, 4Ax, 4Gx, 4Ux, 4Vx, 52x, 53x
- 7458-CTO, 7Fx, 7Gx, F2x
- 7459-CTO, 6Wx
- 2023-CTO
- 2024-CTO
- 7462-CTO, 22x, 23x, 24x, 25x, 26x, 47x, 4Qx, 4Wx, F6x, F7x, F8x, F9x, FAx, FBx, FCx, FDx, FEx, FFx, FGx, FHx, FJx, FMx, FSx
- 7465-CTO, 23x, 2Mx, 3Xx, 3Yx, 3Zx, D4x, D6x, D7x, D8x, D9x, DAx, DBx, DCx, DDx, DEx, DJx, DKx
- 7466-CTO, 34x, 9Jx, 9Mx, 9Rx, 9Tx, 9Xx
- 7469-CTO, 54x, 58x, 59x, 5Ax, 5Bx, 5Cx, 5Dx, 5Ex
- 7470-CTO, 65x
- 2046-CTO
- 2047-CTO

Note: The Windows Vista recovery DVDs are available only for models with a valid Microsoft Windows Vista certificate of authenticity (COA) affixed to the system. Due to a Microsoft licensing limitation, if a model came with Windows Vista Business or Windows Vista Ultimate preinstalled from the factory, but has a Windows 7 COA affixed to the system, that model is eligible only for recovery DVDs that match the operating system specified on the COA.

Downloaded from LpManual.com Manuals

Table 47. Parts list—Windows Vista Home Basic (32-bit) DVDs

Language	P/N	CRU ID
English	58Y2826	*
Japanese	58Y2822	
Korean	58Y2823	
Russian	58Y2825	
Russian (English-enabled)	58Y2824	
Simplified Chinese	58Y2819	
Traditional Chinese	58Y2820	
Traditional Chinese (Hong Kong S.A.R.)	58Y2821	

- 3249-CTO
- 3323-CTO
- 3357-CTO
- 3626-CTO
- 3680-CTO
- 3712-CTO
- 4492-CTO
- 5129-CTO
- 5143-CTO
- 5385-CTO
- 5397-CTO
- 5413-CTO
- 5442-CTO
- 5446-CTO

Table 48. Parts list—Windows 7 Starter (32-bit) recovery DVDs

Language	P/N (with MS 2007)	P/N (with MS 2010)	CRU ID
English	76Y2331	04T2449	*
English (for India)	76Y2330	04T2448	

Windows Vista Home Premium (32-bit) DVDs

Windows Vista Home Premium (32-bit) is preinstalled as the operating system in the following models:

- 7454-CTO, 29x, 3Hx, 3Jx, 3Rx
- 7455-CTO, 4Bx, DAx, DEx
- 7457-CTO, 48x, 4Bx, 4Hx, 4Wx, 54x
- 7458-CTO, 2Fx, FHx
- 7459-CTO
- 2023-CTO
- 2024-CTO
- 7462-CTO, 42x, 4Xx, 4Yx, F2x, F3x, F4x, F5x
- 7465-CTO
- 7466-CTO, 3Hx, 47x, 48x, 49x, 4Ax, 4Ex, 4Fx, 9Zx, F2x, F3x
- 7469-CTO, 55x, 56x, 57x, E2x, G4x, G6x, G7x
- 7470-CTO
- 2046-CTO
- 2047-CTO

Downloaded from LpManual.com Manuals

Note: The Windows Vista recovery DVDs are available only for models with a valid Microsoft Windows Vista certificate of authenticity (COA) affixed to the system. Due to a Microsoft licensing limitation, if a model came with Windows Vista Business or Windows Vista Ultimate preinstalled from the factory, but has a Windows 7 COA affixed to the system, that model is eligible only for recovery DVDs that match the operating system specified on the COA.

Table 49. Parts list—Windows Vista Home Premium (32-bit) DVDs

Language	P/N	CRU ID
Danish	58Y2802	*
English	58Y2815	
English (modem-disabled)	58Y2814	
English, Finnish, and Swedish (in Sweden)	58Y2817	
English, French, German, and Dutch (in Belgium and Luxemburg)	58Y2816	
English, French, German, and Italian (in Switzerland)	58Y2818	
French	58Y2803	
German	58Y2804	
Hebrew	58Y2805	
Italian	58Y2807	
Japanese	58Y2808	
Korean	58Y2809	
Norwegian	58Y2810	
Russian	58Y2812	
Russian (English-enabled)	58Y2811	
Simplified Chinese	58Y2800	
Spanish	58Y2813	
Traditional Chinese	58Y2801	
Traditional Chinese (Hong Kong S.A.R.)	58Y2806	

Windows Vista Business (32-bit) DVDs

Windows Vista Business (32-bit) is preinstalled as the operating system in the following models:

- 7454-CTO, 22x, 23x, 24x, 25x, 26x, 27x, 28x, 2Gx, 2Hx, 2Jx, 2Kx, 2Lx, 2Mx, 2Nx, 2Px, 2Sx, 38x, 97x, 98x, 9Fx
- 7455-CTO, 32x, 33x, 34x, 35x, 36x, 38x, 3Ax, 3Bx, 3Dx, 3Ex, 3Fx, 3Gx, 3Hx, 3Jx, 3Sx, 3Tx, 3Ux, 3Vx, 3Wx, 3Xx, 3Yx, 3Zx, 42x, 43x, 47x, 4Cx, 4Dx, 4Ex, 4Fx, 4Gx, 85x, 87x, 88x, 8Fx, 8Gx, 8Hx, 8Jx, 8Kx, D2x, D5x, D6x, D7x, D8x, DBx, DCx, DDx, DFx, DJx, DKx, DLx, DMx, DNx, DRx, DUx, DVx, DWx, DXx, DYx, DZx, N5x
- 7457-CTO, 42x, 43x, 44x, 45x, 46x, 47x, 49x, 4Cx, 4Dx, 4Ex, 4Fx, 4Jx, 4Rx
- 7458-CTO, 26x, 28x, 2Bx, 2Cx, 2Dx, 2Kx, 2Lx, 2Mx, 2Nx, 2Px, 2Rx, 2Sx, 4Yx, 52x, 53x, 54x, 55x, 56x, 57x, 58x, 59x, 5Ax, 5Bx, 5Cx, 5Dx, 5Ex, 5Fx, 5Jx, 5Lx, 5Mx, 5Px, 5Qx, 5Rx, 5Tx, 69x, 6Xx, 6Zx, 72x, 73x, 76x, 77x, 79x, 7Bx, 7Dx, 7Ex, 7Hx, 7Jx, 7Kx, 7Lx, 7Mx, 7Nx, 7Px, 7Qx, 7Rx, 8Bx, 8Cx, 8Dx, 8Ex, 8Fx, 8Gx, 8Hx, 8Jx, 8Kx, 8Lx, 8Qx, 8Rx, 8Sx, 8Tx, 8Xx, 8Yx, 8Zx, E2x, F3x, F4x, F5x, F6x, F7x, F8x, F9x, FCx, FDx, FEx, FGx, FJx, FKx, FLx, FMx, FQx, FSx, FUx, FWx, FXx, G4x, G6x, G7x, G8x, G9x, GBx, GCx, GDx, GFx, M2x, X4x, X5x
- 7459-CTO, 5Fx, 62x, 63x, 64x, 66x, 67x, 68x, 69x, 6Bx, 6Cx, 6Dx, 6Ex, 6Fx, 6Gx, 6Jx, 6Kx, 6Mx, 6Nx, 6Qx, 6Rx, 6Sx, 6Tx, 6Ux, 6Vx, H3x, H4x, H5x, H6x, H7x, M2x, M3x, M4x
- 2023-CTO

Downloaded from LpManual.com Manuals

- 2024-CTO
- 7462-CTO, 45x, 48x, 49x, 4Ax, 4Bx, 4Cx, 4Dx, 4Ex, 4Fx, 4Gx, 4Hx, 4Jx, 4Kx, 4Lx, 4Mx, 4Nx, 4Px, 4Rx, 4Sx, 4Tx, 4Ux, 4Zx, FKx, FNx, FQx, FRx, FTx, FUx, FVx
- 7465-CTO, 24x, 25x, 26x, 27x, 28x, 29x, 2Dx, 2Ex, 2Fx, 2Hx, 2Jx, 2Kx, 2Lx, 2Nx, 2Px, 2Qx, 2Rx, 2Wx, 2Yx, D2x, D3x
- 7466-CTO, 35x, 38x, 39x, 3Ax, 3Bx, 3Cx, 3Dx, 3Ex, 3Fx, 3Gx, 3Jx, 3Mx, 3Px, 3Qx, 3Tx, 3Ux, 3Vx, 3Wx, 3Xx, 3Yx, 3Zx, 4Bx, 4Cx, 4Dx, 59x, 5Bx, 5Dx, F9x, 92x, 93x, 94x, 95x, 96x, 97x, 98x, 99x, 9Ax, 9Bx, 9Cx, 9Dx, 9Ex, 9Fx, 9Gx, 9Hx, 9Kx, 9Lx, 9Nx, 9Qx, 9Sx, 9Ux, 9Wx, DMx, H2x, H5x, H6x, H7x, H8x, H9x, HAx, HBx, HCx, HEx
- 7469-CTO, 5Fx, 5Gx, 5Hx, 5Jx, 5Kx, 5Lx, 5Mx, 5Nx, 5Px, 5Qx, 5Rx, 5Sx, 5Tx, 5Ux, 5Vx, 5Xx, 5Yx, 5Zx, 6Kx, 6Lx, 6Mx, 6Px, 6Qx, 72x, 73x, 74x, 75x, 76x, 77x, 78x, 79x, 7Bx, 7Cx, 7Dx, 7Ex, 7Fx, 7Hx, 7Jx, 7Kx, 7Lx, 7Mx, 7Nx, 7Px, 7Qx, 7Sx, 7Tx, 7Ux, 7Xx, 7Yx, 7Zx, 82x, 83x, 84x, 85x, 86x, 88x, 89x, 8Ax, 8Bx, 8Cx, 8Dx, 8Ex, 8Fx, 8Gx, 8Hx, 8Jx, 8Lx, 8Mx, 8Nx, 8Px, 8Rx, 8Sx, 8Tx, 8Ux, 8Wx, 8Yx, 8Zx, G2x, G3x, G5x, GAx, GBx, GCx
- 7470-CTO, 64x, 68x, 69x, 6Ax, 6Bx, 6Cx, 6Dx, 6Ex, 6Fx, 6Gx, 6Hx, 6Jx, 6Kx, 6Mx, 6Nx, 6Px, 6Rx, 6Sx, 6Tx, 6Ux, 6Vx, 8Tx, 8Ux, 8Zx, E2x
- 2046-CTO
- 2047-CTO

Note: The Windows Vista recovery DVDs are available only for models with a valid Microsoft Windows Vista certificate of authenticity (COA) affixed to the system. Due to a Microsoft licensing limitation, if a model came with Windows Vista Business or Windows Vista Ultimate preinstalled from the factory, but has a Windows 7 COA affixed to the system, that model is eligible only for recovery DVDs that match the operating system specified on the COA.

Table 50. Parts list—Windows Vista Business (32-bit) DVDs

Language	P/N	CRU ID
Brazilian Portuguese	58Y2770	*
Czech	58Y2773	
Danish	58Y2774	
English	58Y2796	
English (modem-disabled)	58Y2795	
English, Finnish, and Swedish (in Sweden)	58Y2798	
English, French, German, and Dutch (in Belgium and Luxemburg)	58Y2797	
English, French, German, and Italian (in Switzerland)	58Y2799	
French	58Y2775	
German	58Y2777	
Greek	58Y2776	
Hebrew	58Y2778	
Hungarian	58Y2780	
Italian	58Y2781	
Japanese	58Y2782	
Korean	58Y2783	
Norwegian	58Y2784	
Polish	58Y2785	
Portuguese	58Y2786	

Downloaded from LpManual.com Manuals

Table 50. Parts list—Windows Vista Business (32-bit) DVDs (continued)

Language	P/N	CRU ID
Romanian	58Y2788	
Russian	58Y2789	
Russian (English-enabled)	58Y2787	
Serbian-Latin	58Y2793	
Simplified Chinese	58Y2771	
Slovak	58Y2790	
Slovenian	58Y2791	
Spanish	58Y2792	
Traditional Chinese	58Y2772	
Traditional Chinese (Hong Kong S.A.R.)	58Y2779	
Turkish	58Y2794	

- 3249-CTO
- 3323-CTO
- 3357-CTO
- 3626-CTO
- 3680-CTO
- 3712-CTO
- 4492-CTO
- 5129-CTO
- 5143-CTO
- 5385-CTO
- 5397-CTO
- 5413-CTO
- 5442-CTO
- 5446-CTO

Table 51. Parts list—Windows Vista Business (32-bit) DVDs

Language	P/N (with MS 2007)	P/N (with MS 2010)	CRU ID
English	76Y2327	04T2447	*
English (for India)	76Y2326	04T2445	
Japanese	03W6167	04T2446	

Windows Vista Business (64-bit) DVDs

Windows Vista Business (64-bit) is preinstalled as the operating system in the following models:

- 7454-CTO
- 7455-CTO
- 7457-CTO
- 7458-CTO, 2Ex, 6Yx, G5x
- 7459-CTO, 6Xx, 6Yx, 6Zx, E3x, H2x
- 2023-CTO
- 2024-CTO
- 7462-CTO
- 7465-CTO

Downloaded from LpManual.com Manuals

- 7466-CTO
- 7469-CTO, 6Nx, 6Rx, 7Vx, 8Kx, 8Qx
- 7470-CTO
- 2046-CTO
- 2047-CTO

Note: The Windows Vista recovery DVDs are available only for models with a valid Microsoft Windows Vista certificate of authenticity (COA) affixed to the system. Due to a Microsoft licensing limitation, if a model came with Windows Vista Business or Windows Vista Ultimate preinstalled from the factory, but has a Windows 7 COA affixed to the system, that model is eligible only for recovery DVDs that match the operating system specified on the COA.

Table 52. Parts list—Windows Vista Business (64-bit) DVDs

Language	P/N	CRU ID
English	58Y2831	*
English (modem-disabled)	58Y2830	
German	58Y2828	
Japanese	58Y2829	
Simplified Chinese	58Y2827	

Windows Vista Ultimate (32-bit) DVDs

Windows Vista Ultimate (32-bit) is preinstalled as the operating system in the following models:
- 7454-CTO, 9Hx
- 7455-CTO, D9x
- 7457-CTO
- 7458-CTO, 2Qx, 5Hx, 5Nx, 5Sx, 7Cx, FAx, FFx, GEx
- 7459-CTO, 65x, 6Ax
- 2023-CTO
- 2024-CTO
- 7462-CTO, FPx
- 7465-CTO
- 7466-CTO
- 7469-CTO, 7Ax
- 7470-CTO
- 2046-CTO
- 2047-CTO

Note: The Windows Vista recovery DVDs are available only for models with a valid Microsoft Windows Vista certificate of authenticity (COA) affixed to the system. Due to a Microsoft licensing limitation, if a model came with Windows Vista Business or Windows Vista Ultimate preinstalled from the factory, but has a Windows 7 COA affixed to the system, that model is eligible only for recovery DVDs that match the operating system specified on the COA.

Downloaded from LpManual.com Manuals

Table 53. Parts list—Windows Vista Ultimate (32-bit) DVDs

Language	P/N	CRU ID
Czech	58Y2834	*
Danish	58Y2835	
English	58Y2851	
English, Finnish, and Swedish (in Sweden)	58Y2853	
English, French, German, and Dutch (in Belgium and Luxemburg)	58Y2852	
English, French, German, and Italian (in Switzerland)	58Y2854	
French	58Y2836	
German	58Y2838	
Greek	58Y2837	
Hebrew	58Y2839	
Hungarian	58Y2841	
Italian	58Y2842	
Norwegian	58Y2843	
Polish	58Y2844	
Romanian	58Y2845	
Serbian-Latin	58Y2849	
Simplified Chinese	58Y2832	
Slovak	58Y2846	
Slovenian	58Y2847	
Spanish	58Y2848	
Traditional Chinese	58Y2833	
Traditional Chinese (Hong Kong S.A.R.)	58Y2840	
Turkish	58Y2850	

- 3249-CTO
- 3323-CTO
- 3357-CTO
- 3626-CTO
- 3680-CTO
- 3712-CTO
- 4492-CTO
- 5129-CTO
- 5143-CTO
- 5385-CTO
- 5397-CTO
- 5413-CTO
- 5442-CTO
- 5446-CTO

Downloaded from LpManual.com Manuals

Table 54. Parts list—Windows Vista Ultimate (32-bit) DVDs

Language	P/N	CRU ID
English	04T2501	*
English (for India)	04T2500	

Windows 7 Home Basic (32-bit) DVDs

Windows 7 Home Basic (32-bit) is preinstalled as the operating system in the following models:

- 7454-CTO, 3Kx, 3Yx, 3Zx, G2x, G3x, GFx, GGx, GHx, GJx, GPx
- 7455-CTO, F3x, FTx, FUx
- 7457-CTO, 55x, 56x, 57x
- 7458-CTO
- 7459-CTO
- 2023-CTO
- 2024-CTO
- 7462-CTO, 27x, 28x, 29x, 2Ax, 2Bx, 2Cx, 2Dx, 2Ex, 2Fx, 2Gx, 2Hx
- 7465-CTO, 3Tx, G2x, G3x, G4x
- 7466-CTO
- 7469-CTO
- 7470-CTO
- 2046-CTO
- 2047-CTO

Table 55. Parts list—Windows 7 Home Basic (32-bit) DVDs

Language	P/N	CRU ID
Brazilian Portuguese	58Y3907	*
English	58Y3915	
English (for India)	58Y3909	
Russian	58Y3911	
Russian (English-enabled)	58Y3910	
Serbian-Latin	58Y3913	
Simplified Chinese	58Y3908	
Spanish	58Y3912	
Turkish	58Y3914	

- 3249-CTO, 23x, 26x, 27x, 2Bx, 2Jx, 2Kx, J3x, J4x, J6x, J7x, JFx, JGx, JHx, JJx, JKx, JLx, JMx, JNx, JPx, NVx, MUx, MVx, MWx, MXx, MYx, MZx, 2Wx, 2Xx, 2Yx, 2Zx, 39x, 3Ax, 3Bx, 3Cx, 3Dx, 3Ex, 3Fx, 3Gx, 3Hx, 3Jx, 3Kx, 3Lx, 3Mx, 3Nx, CBx, CCx, CDx, CEx, CFx, CGx, QLx, QMx, QNx, QPx, QRx
- 3323-CTO, 49x, 4Kx, 4Yx, 85x, AVx, AWx, AXx, AYx, AZx, B2x, B4x, B9x, BAx, BGx, D8x, JVx, JWx, JXx, JYx, JZx, K5x, K6x, K7x, K8x, K9x, KWx, LXx, LYx, LZx, M7x, N2x, N3x, N4x, N5x, QUx, QVx, QWx, QZx
- 3357-CTO, 3Px, D2x, LNx
- 3626-CTO, 17x, 18x, 19x, G4x, G9x, GAx
- 3680-CTO
- 3712-CTO
- 4492-CTO
- 5129-CTO, 74x, 75x, 76x, 77x
- 5143-CTO
- 5385-CTO, D5x, D6x, D7x, D8x
- 5397-CTO

Downloaded from LpManual.com Manuals

- 5413-CTO
- 5442-CTO
- 5446-CTO

Table 56. Parts list—Windows 7 Home Basic (32-bit) recovery DVDs

Language	P/N (with MS 2007)	P/N (with MS 2010)	CRU ID
Brazilian Portuguese	76Y1176	04T2481	*
English	76Y1185	04T2490	
English (for India)	76Y1178	04T2483	
English (modem-disabled)	76Y1184	04T2489	
Russian	76Y1180	04T2485	
Russian (English-enabled)	76Y1179	04T2484	
Serbian-Latin	76Y1182	04T2487	
Simplified Chinese	76Y1177	04T2482	
Spanish	76Y1181	04T2486	
Turkish	76Y1183	04T2488	

Windows 7 Home Premium (32-bit) DVDs

Windows 7 Home Premium (32-bit) is preinstalled as the operating system in the following models:
- 7454-CTO, 3Px, 3Tx, GCx
- 7455-CTO, 49x, 4Nx, 8Rx, 8Yx, P4x, P5x
- 7457-CTO, 58x
- 7458-CTO
- 7459-CTO
- 2023-CTO
- 2024-CTO
- 7462-CTO
- 7465-CTO, 3Jx, 3Lx, 3Wx, G6x, G7x, G8x, G9x, GAx
- 7466-CTO, 46x, 4Zx, 5Lx, 5Px, 5Tx, 5Ux, F5x, FDx, FGx, FJx, FLx
- 7469-CTO, 93x, 9Ax
- 7470-CTO
- 2046-CTO
- 2047-CTO

Table 57. Parts list—Windows 7 Home Premium (32-bit) DVDs

Language	P/N	CRU ID
Brazilian Portuguese	58Y3916	*
English	58Y3930	
English (for India)	58Y3919	
English (modem-disabled)	58Y3929	
French	58Y3920	
Hebrew	58Y3921	
Japanese	58Y3923	
Korean	58Y3924	

Downloaded from LpManual.com Manuals

Table 57. Parts list—Windows 7 Home Premium (32-bit) DVDs (continued)

Language	P/N	CRU ID
Russian	58Y3926	
Russian (English-enabled)	58Y3925	
Simplified Chinese	58Y3917	
Spanish	58Y3927	
Traditional Chinese	58Y3918	
Traditional Chinese (Hong Kong S.A.R.)	58Y3922	
Turkish	58Y3928	

- 3249-CTO, 22x, 29x, 2Ax, J5x, J8x, J9x, JAx, JQx, JTx, 33x, 3Sx, 34x, 3Tx, 35x, 3Ux, 36x, 3Vx, 37x, 3Wx, MRx, MSx, CKx, CHx, CMx, CPx, CRx, CTx, CJx, CLx
- 3323-CTO, 43x, 44x, 45x, 46x, 4Lx, 4Wx, 8Bx, 8Jx, 8Nx, 9Zx, ANx, ASx, AUx, BYx, E3x, KCx, KGx, KYx, N6x, N9x, NCx, PPx
- 3357-CTO, D4x, D6x, LMx
- 3626-CTO, G5x, GBx
- 3680-CTO
- 3712-CTO
- 4492-CTO
- 5129-CTO, 73x
- 5143-CTO, 4Cx
- 5385-CTO, D4x
- 5397-CTO, GAx
- 5413-CTO
- 5442-CTO
- 5446-CTO

Table 58. Parts list—Windows 7 Home Premium (32-bit) DVDs

Language	P/N (with MS 2007)	P/N (with MS 2010)	CRU ID
English	76Y1194	04T2499	*
English (for India)	76Y1188	04T2493	
Japanese	76Y1190	04T2495	
Korean	76Y1191	04T2496	
Russian	76Y1193	04T2498	
Russian (English-enabled)	76Y1192	04T2497	
Simplified Chinese	76Y2654	04T2491	
Traditional Chinese	76Y1187	04T2492	
Traditional Chinese (Hong Kong S.A.R.)	76Y1189	04T2494	

Windows 7 Home Premium (64-bit) DVDs

Windows 7 Home Premium (64-bit) is preinstalled as the operating system in the following models:

- 7454-CTO
- 7455-CTO
- 7457-CTO
- 7458-CTO
- 7459-CTO

Downloaded from LpManual.com Manuals

- 2023-CTO
- 2024-CTO
- 7462-CTO
- 7465-CTO
- 7466-CTO
- 7469-CTO
- 7470-CTO
- 2046-CTO
- 2047-CTO

Table 59. Parts list—Windows 7 Home Premium (64-bit) DVDs

Language	P/N	CRU ID
English	58Y3936	*
English (for India)	58Y3932	
Japanese	58Y3933	
Polish	58Y3934	
Simplified Chinese	58Y3931	
Turkish	58Y3935	

- 3249-CTO, 3Xx, C8x, DFx, ESx, DGx, DHx, DJx, ENx, QCx, QDx, Q9x
- 3323-CTO, 7Kx, 7Lx, 7Mx, 7Nx, 7Ux, 7Vx, 7Wx, 7Xx, 8Kx, 8Px, KDx, KHx
- 3357-CTO
- 3626-CTO, GEx, Q2x
- 3680-CTO
- 3712-CTO
- 4492-CTO
- 5129-CTO, 73x
- 5143-CTO, 4Dx
- 5385-CTO
- 5397-CTO
- 5413-CTO
- 5442-CTO
- 5446-CTO

Table 60. Parts list—Windows 7 Home Premium (64-bit) DVDs

Language	P/N (with MS 2007)	P/N (with MS 2010)	CRU ID
English	76Y1209	04T2529	*
English (for India)	76Y1199	04T2518	
English (modem-disabled)	76Y1208	04T2528	
French	N/A	04T2519	
Japanese	03W6237	04T2521	
Korean	76Y1202	04T2522	
Polish	76Y1203	04T2523	
Russian	76Y1205	04T2525	
Russian (English-enabled)	76Y1204	04T2524	
Serbian-Latin	76Y1206	04T2526	

Downloaded from LpManual.com Manuals

Table 60. Parts list—Windows 7 Home Premium (64-bit) DVDs (continued)

Language	P/N (with MS 2007)	P/N (with MS 2010)	CRU ID
Simplified Chinese	76Y2659	04T2516	
Traditional Chinese	76Y1198	04T2517	
Traditional Chinese (Hong Kong S.A.R.)	76Y1200	04T2520	
Turkish	76Y1207	04T2527	
English, Finnish, and Swedish (in Sweden)	76Y1210	04T2530	
English, French, German, and Italian (in Switzerland)	76Y1211	04T2531	

Windows 7 Professional (32-bit) DVDs

Windows 7 Professional (32-bit) is preinstalled as the operating system in the following models:

- 7454-CTO, 33x, 3Lx, 3Qx, 3Vx, 3Wx, 3Xx, GDx, GEx, GLx, GMx, GNx
- 7455-CTO, 44x, 45x, 46x, 48x, 4Ax, 4Hx, 4Kx, 4Sx, 4Vx, 4Wx, 4Xx, 4Yx, 4Zx, 82x, 83x, 84x, 86x, 8Cx, 8Dx, 8Ex, 8Lx, 8Mx, 8Nx, 8Px, 8Qx, 8Sx, 8Tx, 8Ux, F2x, F4x, F5x, F6x, FDx, FEx, FFx, FGx, FHx, FJx, FKx, FNx, FPx, FQx, FSx, FVx, FWx, FXx, FYx, FZx, P2x, P7x, P9x, PAx, PCx, PDx, PEx, PFx, PHx
- 7457-CTO
- 7458-CTO, 62x, 64x, 66x, 6Ax, 6Cx, 6Dx, 6Ex, 6Jx, 6Kx, 6Qx, 6Rx, 6Sx, 6Tx, 6Ux, 6Vx, 6Wx
- 7459-CTO, 73x, 74x, 75x
- 2023-CTO
- 2024-CTO
- 7462-CTO
- 7465-CTO, 3Kx, 3Mx, 3Rx, 3Ux, GBx
- 7466-CTO, 4Hx, 4Lx, 4Px, 4Tx, 4Vx, 4Wx, 4Xx, 52x, 53x, 54x, 55x, 56x, 57x, 58x, 5Ax, 5Cx, 5Ex, 5Fx, 5Gx, 5Hx, 5Mx, 5Qx, 5Rx, 5Sx, 5Vx, 5Yx, F6x, F7x, F8x, FAx, FBx, FEx, FHx, FKx, FMx, FPx, FQx, FRx, FSx, FTx, FUx, FVx, FXx, FYx, FZx, N2x
- 7469-CTO, 63x, 65x, 67x, 69x, 6Bx, 6Cx, 6Dx, 6Ex, 6Hx, 6Jx, 6Tx, 6Ux, 6Vx, 6Xx, 6Yx, 94x, 95x, 96x, 97x, 98x, 99x, 9Bx, 9Ex, 9Gx
- 7470-CTO, 73x, 74x, 75x, 76x, 77x
- 2046-CTO
- 2047-CTO

Table 61. Parts list—Windows 7 Professional (32-bit) DVDs

Language	P/N	CRU ID
Brazilian Portuguese	58Y3862	*
Czech	58Y3865	
Danish	58Y3866	
English	58Y3889	
English (modem-disabled)	58Y3888	
English (for India)	58Y3867	
English, Finnish, and Swedish (in Sweden)	58Y3891	
English, French, German, and Dutch (in Belgium and Luxemburg)	58Y3890	
English, French, German, and Italian (in Switzerland)	58Y3892	
French	58Y3868	
German	58Y3870	

Downloaded from LpManual.com Manuals

Table 61. Parts list—Windows 7 Professional (32-bit) DVDs (continued)

Language	P/N	CRU ID
Greek	58Y3869	
Hebrew	58Y3871	
Hungarian	58Y3873	
Italian	58Y3874	
Japanese	58Y3875	
Korean	58Y3876	
Norwegian	58Y3877	
Polish	58Y3878	
Portuguese	58Y3879	
Romanian	58Y3881	
Russian	58Y3882	
Russian (English-enabled)	58Y3880	
Serbian-Latin	58Y3886	
Simplified Chinese	58Y3863	
Slovak	58Y3883	
Slovenian	58Y3884	
Spanish	58Y3885	
Traditional Chinese	58Y3864	
Traditional Chinese (Hong Kong S.A.R.)	58Y3872	
Turkish	58Y3887	

- 3249-CTO, 24x, 25x, 28x, 2Cx, 2Dx, 2Ex, J2x, 2Fx, 2Gx, 2Hx, 2Lx, 2Nx, NTx, Nux, JRx, JSx, JUx, 32x, 3Rx, MGx, MHx, MLx, MNx, MTx, CNx, CSx, CUx, 3Yx, 1Bx, 1Cx, 1Dx, 1Ex
- 3323-CTO, 12x, 1Mx, 1Nx, 1Px, 1Sx, 1Tx, 1Vx, 1Wx, 1Yx, 48x, 4Ax, 4Hx, 4Jx, 4Mx, 4Nx, 4Px, 4Sx, 4Zx, 52x, 53x, 54x, 55x, 57x, 59x, 5Bx, 5Cx, 5Dx, 5Ex, 5Fx, 5Gx, 5Hx, 5Jx, 5Ux, 5Vx, 5Wx, 5Yx, 5Zx, 62x, 63x, 64x, 6Dx, 6Ex, 6Fx, 6Gx, 6Hx, 6Jx, 6Kx, 6Lx, 6Wx, 6Yx, 6Zx, 72x, 73x, 74x, 75x, 76x, 83x, 84x, 86x, 87x, 88x, 8Cx, 8Dx, 8Ex, 8Gx, 8Lx, 8Rx, 8Sx, 8Tx, 8Ux, 8Zx, 95x, 97x, 98x, 9Cx, 9Ex, 9Jx, 9Kx, A5x, A6x, A7x, A8x, A9x, AAx, ABx, ACx, AEx, AFx, APx, ATx, B3x, B5x, B6x, B7x, B8x, BBx, BCx, BDx, BEx, BFx, BHx, BJx, BKx, BLx, BTx, BUx, BWx, C6x, C7x, D9x, DKx, DLx, DMx, DNx, DPx, DRx, DSx, DTx, DUx, DVx, DWx, E2x, ETx, EWx, EYx, EZx, JCx, JEx, K4x, KAx, KEx, KJx, KLx, KMx, KNx, KUx, KVx, KZx, L2x, L3x, L5x, LCx, LDx, LFx, LGx, LKx, LLx, LPx, LRx, LSx, LTx, LUx, LVx, LWx, M2x, M3x, M4x, M5x, M6x, M8x, M9x, MAx, N7x, N8x, NAx, NDx, NFx, NJx, NYx, NZx, PRx, PSx, PTx, PUx, QEx, QXx, QYx, R2x, RAx, RCx, RFx, RGx, RHx, RLx, RNx, RRx, RSx
- 3357-CTO, D3x, D5x, D7x
- 3626-CTO, 11x, 16x, 1Kx, F2x, F4x, F6x, F7x, F8x, F9x, FAx, FBx, FCx, FDx, FEx, FFx, FLx, FNx, FPx, FRx, FTx, FVx, FXx, FYx, G7x, GDx, GFx, GHx, GJx, GKx, GSx, GTx, GXx, H8x, H9x, HDx, HEx, HFx, HGx, HHx, HKx, HMx, HUx, HVx, HWx, HXx, Hyx, HZx, PVx, QSx, QTx, R3x, R5x, R6x, R7x, R8x, R9x, RMx, N2x, RYx, RZx, Q8x
- 3680-CTO, 11x, 4Qx, F7x, F8x, F9x, FAx, FBx, HNx, HQx, HSx, HTx, P4x, P5x, P6x, P7x, PAx, PDx, PKx, PLx, Q6x, N2x
- 3712-CTO
- 4492-CTO
- 5129-CTO, R1x, 78x

Downloaded from LpManual.com Manuals

- 5143-CTO, 22x, 23x, 24x, 25x, 26x, 27x, 28x, 29x, 2Ax, 2Bx, 2Cx, 2Dx, 2Ex, 2Fx, 2Gx, 2Sx, 2Tx, 2Ux, 2Vx, 2Wx, 2Yx, 2Zx, 32x, 3Ux, 3Vx, 3Wx, 3Yx, 3Zx, 42x, 43x, 44x, 45x, 46x, 47x, 4Ex, 4Gx, 4Hx, 4Kx, 4Lx, 4Nx, 4Px
- 5385-CTO, D2x, D3x, D9x
- 5397-CTO, F2x, F3x, F5x, FAx, FDx, FEx, FGx, FHx, FJx, FKx, FMx, FNx, FPx, FSx, FTx, FWx, FXx, G2x, G3x, G4x, G5x, G6x, G7x, G8x, G9x, GBx, GCx, GFx, GGx
- 5413-CTO, FDx, FEx, FGx, L2x, L4x, L7x, L8x, LAx, LBx
- 5442-CTO
- 5446-CTO

Table 62. Parts list—Windows 7 Professional (32-bit) DVDs

Language	P/N (with MS 2007)	P/N (with MS 2010)	CRU ID
Brazilian Portuguese	76Y1085	04T2450	*
Czech	76Y1088	04T2453	
Danish	76Y1089	04T2454	
English	76Y1112	04T2477	
English (modem-disabled)	76Y1111	04T2476	
English (for India)	76Y1090	04T2455	
English, Finnish, and Swedish (in Sweden)	76Y1114	04T2479	
English, French, German, and Dutch (in Belgium and Luxemburg)	76Y1113	04T2478	
English, French, German, and Italian (in Switzerland)	76Y1115	04T2480	
French	76Y1091	04T2456	
German	76Y2650	04T2458	
Greek	76Y1092	04T2457	
Hebrew	76Y1094	04T2459	
Hungarian	76Y1096	04T2461	
Italian	76Y1097	04T2462	
Japanese	03W6184	04T2463	
Korean	76Y1099	04T2464	
Norwegian	76Y1100	04T2465	
Polish	76Y1101	04T2466	
Portuguese	76Y1102	04T2467	
Romanian	76Y1104	04T2469	
Russian	76Y1105	04T2470	
Russian (English-enabled)	76Y1103	04T2468	
Serbian-Latin	76Y1109	04T2474	
Simplified Chinese	76Y2649	04T2451	
Slovak	76Y1106	04T2471	
Slovenian	76Y1107	04T2472	
Spanish	76Y1108	04T2473	
Traditional Chinese	76Y1087	04T2452	

Downloaded from LpManual.com Manuals

Table 62. Parts list—Windows 7 Professional (32-bit) DVDs (continued)

Language	P/N (with MS 2007)	P/N (with MS 2010)	CRU ID
Traditional Chinese (Hong Kong S.A.R.)	76Y1095	04T2460	
Turkish	76Y1110	04T2475	

Windows 7 Professional (64-bit) DVDs

Windows 7 Professional (64-bit) is preinstalled as the operating system in the following models:

- 7454-CTO
- 7455-CTO, 4Qx, 4Rx, 89x, 8Ax, 8Vx, 8Wx, 8Zx
- 7457-CTO
- 7458-CTO, 2Tx, 65x, 67x, 6Lx, 6Mx, 6Nx, 6Px
- 7459-CTO
- 2023-CTO
- 2024-CTO
- 7462-CTO
- 7465-CTO
- 7466-CTO, 44x, 4Kx, 4Nx, 4Rx
- 7469-CTO, 6Fx, 6Gx, 6Wx, 6Zx
- 7470-CTO
- 2046-CTO
- 2047-CTO

Table 63. Parts list—Windows 7 Professional (64-bit) DVDs

Language	P/N	CRU ID
Danish	58Y3895	*
English	58Y3905	
English (for India)	58Y3896	
English, French, German, and Italian (in Switzerland)	58Y3906	
French	58Y3897	
German	58Y3898	
Hebrew	58Y3899	
Italian	58Y3901	
Japanese	58Y3902	
Korean	58Y3903	
Simplified Chinese	58Y3893	
Spanish	58Y3904	
Traditional Chinese	58Y3894	
Traditional Chinese (Hong Kong S.A.R.)	58Y3900	

- 3249-CTO, 2Tx, 2Ux, 2Vx, C2x, MCx, C3x, MDx, EPx, ERx, DCx, DDx, DEx, QBx, QAx, 19x, 1Ax, 1Fx, 1Gx, 1Hx, 1Jx
- 3323-CTO, 1Lx, 1Zx, 3Qx, 4Cx, 4Dx, 4Rx, 4Tx, 5Ax, 7Fx, 7Gx, 7Hx, 7Jx, 7Px, 7Rx, 7Sx, 7Tx, 89x, 8Ax, 8Fx, 8Vx, 8Wx, 8Xx, 8Yx, 9Dx, 9Fx, 9Gx, 9Hx, A2x, A3x, ADx, BSx, DAx, DBx, DXx, DYx, DZx, KFx, KPx, KRx, KSx, KTx, L4x, L6x, MBx, PMx, RBx, RDx, REx, RJx, RKx, RPx
- 3357-CTO

Downloaded from LpManual.com Manuals

- 3626-CTO, F4x, F6x, FTx, FXx, G2x, G7x, G9x, GDx, GMx, GNx, GPx, GRx, GSx, GVx, GWx, GXx, GYx, GZx, H3x, H4x, H5x, H6x, H7x, R3x
- 3680-CTO, 14x, H8x, H9x, HAx, HBx, HCx, HPx, HRx, PJx, P8x, P9x, PBx, PCx, PEx, PFx, PGx, PHx, Q7x
- 3712-CTO
- 4492-CTO
- 5129-CTO
- 5143-CTO, 48x, 49x, 4Ax, 4Bx, 4Jx, 4Mx
- 5385-CTO
- 5397-CTO, F4x, F6x, F7x, F8x, F9x, FBx, FCx, FFx, FRx, GDx, GEx
- 5413-CTO, FFx, L3x, L5x, L6x, L9x
- 5442-CTO
- 5446-CTO

Table 64. Parts list—Windows 7 Professional (64-bit) DVDs

Language	P/N (with MS 2007)	P/N (with MS 2010)	CRU ID
Brazilian Portuguese	N/A	04T2502	*
Danish	76Y1241	04T2504	
English	76Y1250	04T2513	
English (for India)	76Y1242	04T2505	
English (modem-disabled)	76Y1249	04T2512	
French	76Y1243	04T2506	
German	76Y2656	04T2507	
Italian	76Y1246	04T2509	
Japanese	03W6229	04T2510	
Simplified Chinese	76Y2655	04T2503	
Spanish	76Y1248	04T2511	
Traditional Chinese (Hong Kong S.A.R.)	76Y1245	04T2508	
English, Finnish, and Swedish (in Sweden)	N/A	04T2514	
English, French, German, and Italian (in Switzerland)	N/A	04T2515	

Windows 7 Starter (32-bit) DVDs

Windows 7 Starter (32-bit) is preinstalled as the operating system in the following models:

- 3249-CTO
- 3323-CTO
- 3357-CTO
- 3626-CTO
- 3680-CTO
- 3712-CTO
- 4492-CTO
- 5129-CTO
- 5143-CTO
- 5385-CTO
- 5397-CTO
- 5413-CTO
- 5442-CTO
- 5446-CTO

Downloaded from LpManual.com Manuals

Table 65. Parts list—Windows 7 Starter (32-bit) recovery DVDs

Language	P/N	CRU ID
English (for India)	04T2534	*

Common service tools

Table 66. Parts list—Common service tools

Tool	P/N
Screwdriver kit	95F3598
1/4" drive spinner handle	1650840
1/4" Sq. to 1/4" hex torx adapter	93F2838
TR7-TR-10 tamper resistant torx bits	00P6967
Removal tool antenna RF connector	08K7159
USB 2.0 CD-RW/DVD-ROM combo drive II	40Y8687
USB cable	40Y8704
USB floppy diskette drive for maintenance diskette	05K9283
USB floppy diskette drive tool kit	27L3452
Test card for integrated Smart Card	42W7820
ThinkPad Hardware Maintenance Diskette Version 1.73 or later **Note:** Download the file from the following Web site: http://support.lenovo.com	—

Downloaded from LpManual.com Manuals

Downloaded from LpManual.com Manuals

Appendix A. Notices

Lenovo may not offer the products, services, or features discussed in this document in all countries. Consult your local Lenovo representative for information on the products and services currently available in your area. Any reference to a Lenovo product, program, or service is not intended to state or imply that only that Lenovo product, program, or service may be used. Any functionally equivalent product, program, or service that does not infringe any Lenovo intellectual property right may be used instead. However, it is the user's responsibility to evaluate and verify the operation of any other product, program, or service.

Lenovo may have patents or pending patent applications covering subject matter described in this document. The furnishing of this document does not give you any license to these patents. You can send license inquiries, in writing, to:

Lenovo (United States), Inc.
1009 Think Place - Building One
Morrisville, NC 27560
U.S.A.
Attention: Lenovo Director of Licensing

LENOVO PROVIDES THIS PUBLICATION "AS IS" WITHOUT WARRANTY OF ANY KIND, EITHER EXPRESS OR IMPLIED, INCLUDING, BUT NOT LIMITED TO, THE IMPLIED WARRANTIES OF NON-INFRINGEMENT, MERCHANTABILITY OR FITNESS FOR A PARTICULAR PURPOSE. Some jurisdictions do not allow disclaimer of express or implied warranties in certain transactions, therefore, this statement may not apply to you.

This information could include technical inaccuracies or typographical errors. Changes are periodically made to the information herein; these changes will be incorporated in new editions of the publication. Lenovo may make improvements and/or changes in the product(s) and/or the program(s) described in this publication at any time without notice.

The products described in this document are not intended for use in implantation or other life support applications where malfunction may result in injury or death to persons. The information contained in this document does not affect or change Lenovo product specifications or warranties. Nothing in this document shall operate as an express or implied license or indemnity under the intellectual property rights of Lenovo or third parties. All information contained in this document was obtained in specific environments and is presented as an illustration. The result obtained in other operating environments may vary.

Lenovo may use or distribute any of the information you supply in any way it believes appropriate without incurring any obligation to you.

Any references in this publication to non-Lenovo Web sites are provided for convenience only and do not in any manner serve as an endorsement of those Web sites. The materials at those Web sites are not part of the materials for this Lenovo product, and use of those Web sites is at your own risk.

Any performance data contained herein was determined in a controlled environment. Therefore, the result obtained in other operating environments may vary significantly. Some measurements may have been made on development-level systems and there is no guarantee that these measurements will be the same on generally available systems. Furthermore, some measurements may have been estimated through extrapolation. Actual results may vary. Users of this document should verify the applicable data for their specific environment.

© Copyright Lenovo 2010, 2012

Downloaded from LpManual.com Manuals

Trademarks

The following terms are trademarks of Lenovo in the United States, other countries or both:

Active Protection System
Lenovo
Rescue and Recovery
ThinkLight
ThinkPad
ThinkVantage
TrackPoint
UltraBase
Ultrabay
UltraNav

Windows, Windows Vista, and Microsoft are trademarks of the Microsoft group of companies.

The following are trademarks of Intel Corporation or its subsidiaries in the United States, other countries, or both:

Intel
Intel Celeron
Intel Celeron M
Intel Core 2 Duo
Intel Core 2 Solo

Other company, product, or service names may be the trademarks or service marks of others.

Downloaded from LpManual.com Manuals

Downloaded from LpManual.com Manuals

ThinkPad

Part Number: 43Y6632_10

Printed in China

(1P) P/N: 43Y6632_10

Downloaded from LpManual.com Manuals